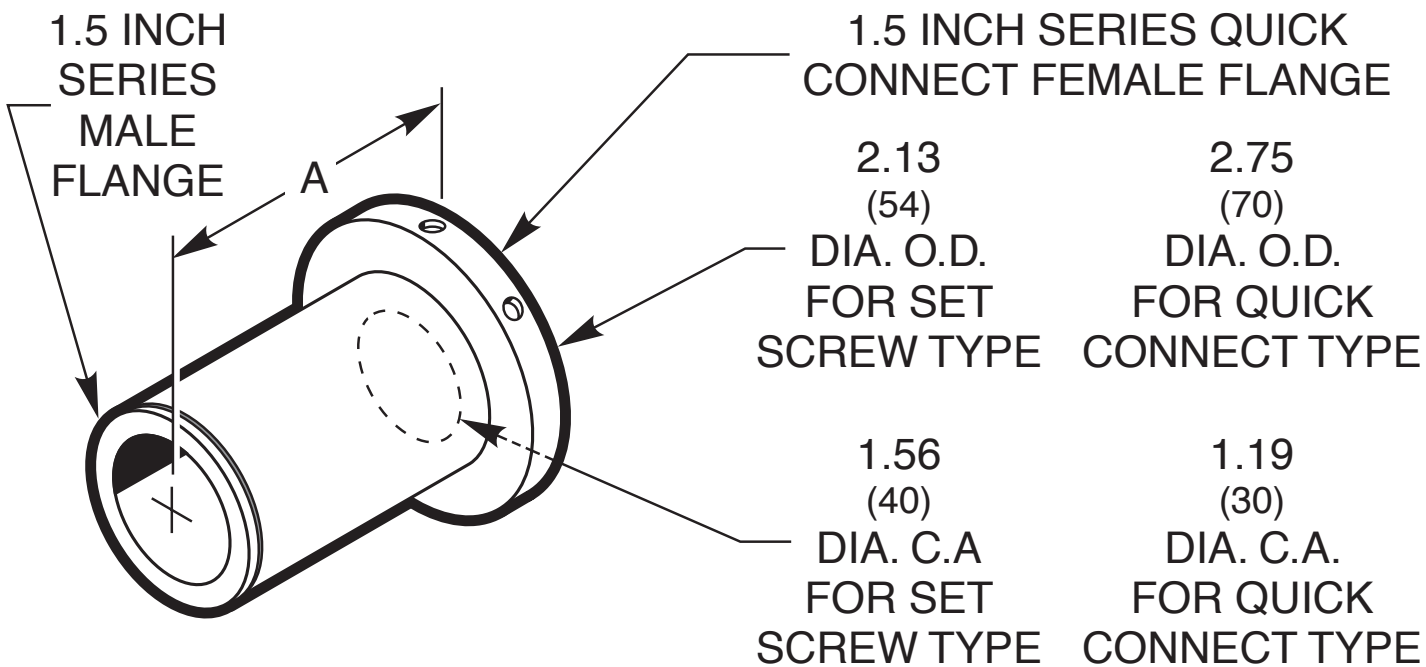
1.5 INCH SERIES MALE FLANGE
A
1.5 INCH SERIES QUICK CONNECT FEMALE FLANGE
2.13 (54) DIA. O.D. FOR SET SCREW TYPE
2.75 (70) DIA. O.D. FOR QUICK CONNECT TYPE
1.56 (40) DIA. C.A FOR SET SCREW TYPE
1.19 (30) DIA. C.A. FOR QUICK CONNECT TYPE