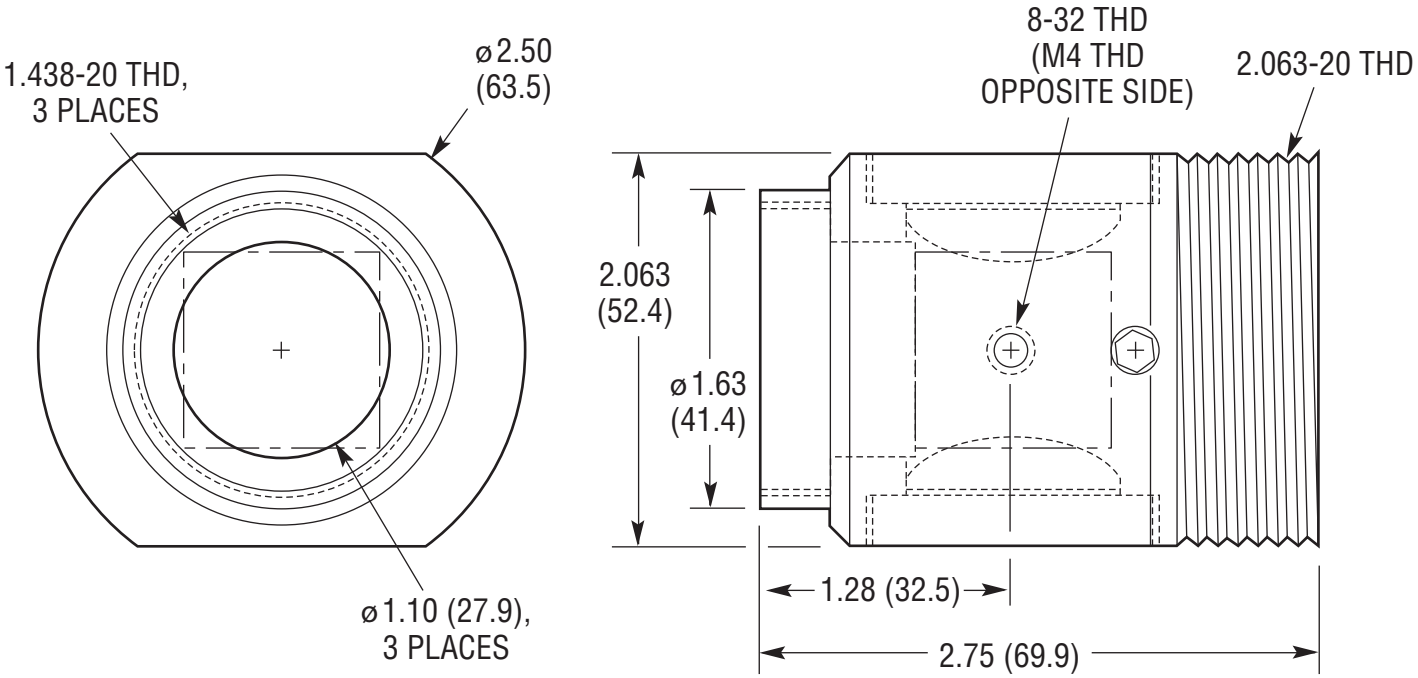
1.438-20 THD,
3 PLACES
ø2.50
(63.5)
ø1.10 (27.9),
3 PLACES
8-32 THD
(M4 THD
OPPOSITE SIDE)
2.063-20 THD
2.063
(52.4)
ø1.63
(41.4)
1.28 (32.5)
2.75 (69.9)

Newport