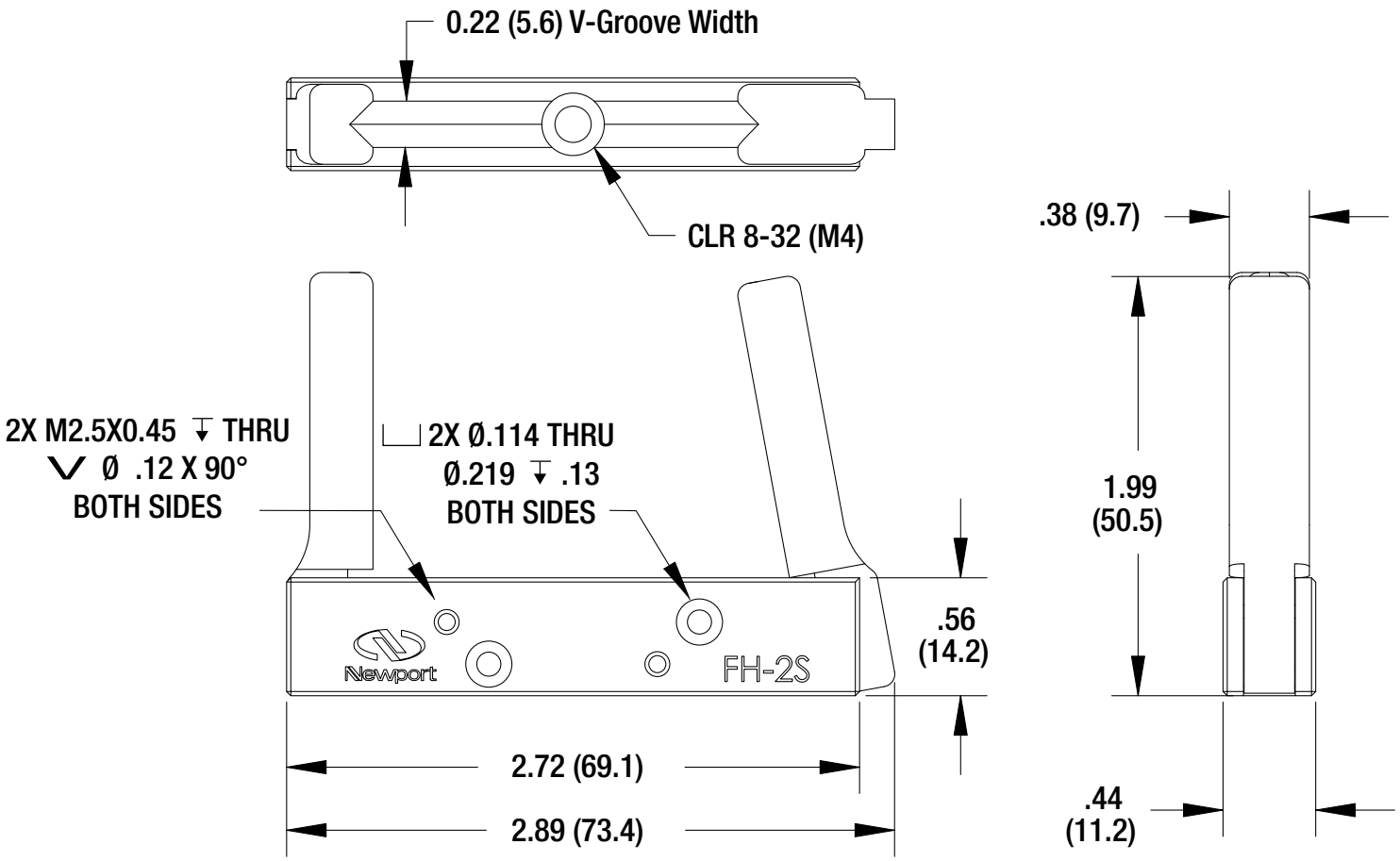
0.22 (5.6) V-Groove Width
CLR 8-32 (M4)
.38 (9.7)
2X M2.5X0.45 ↧ THRU
Ø .12 X 90°
BOTH SIDES
2X Ø.114 THRU
Ø.219 ↧ .13
BOTH SIDES
1.99
(50.5)
.56
(14.2)
Newport
FH-2S
2.72 (69.1)
2.89 (73.4)
.44
(11.2)

Newport®