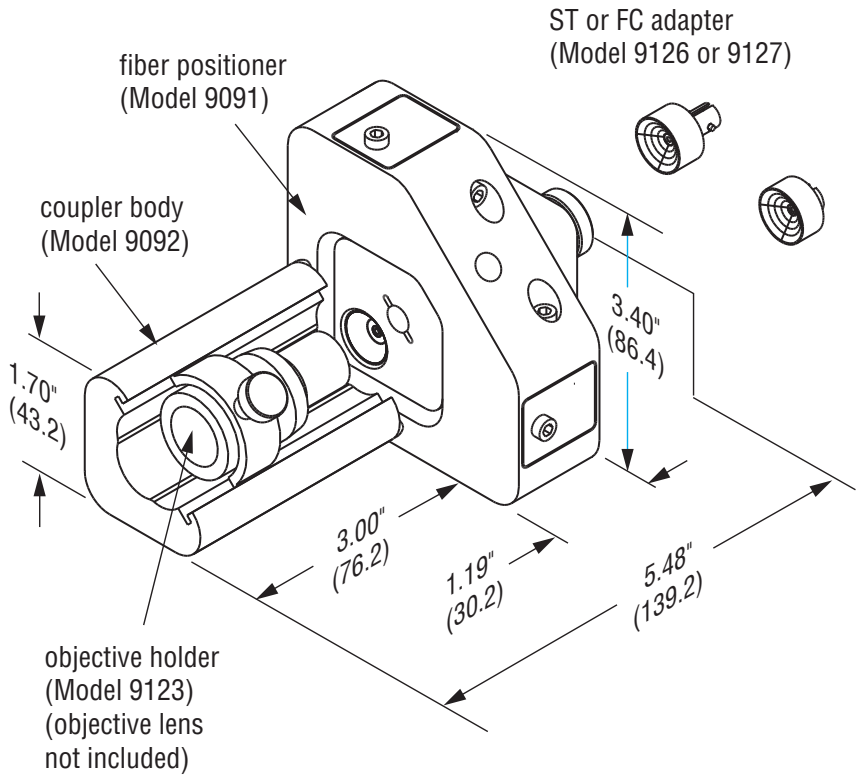
ST or FC adapter
(Model 9126 or 9127)
fiber positioner
(Model 9091)
coupler body
(Model 9092)
1.70"
(43.2)
3.40"
(86.4)
3.00"
(76.2)
1.19"
(30.2)
5.48"
(139.2)
objective holder
(Model 9123)
(objective lens
not included)

New Focus™