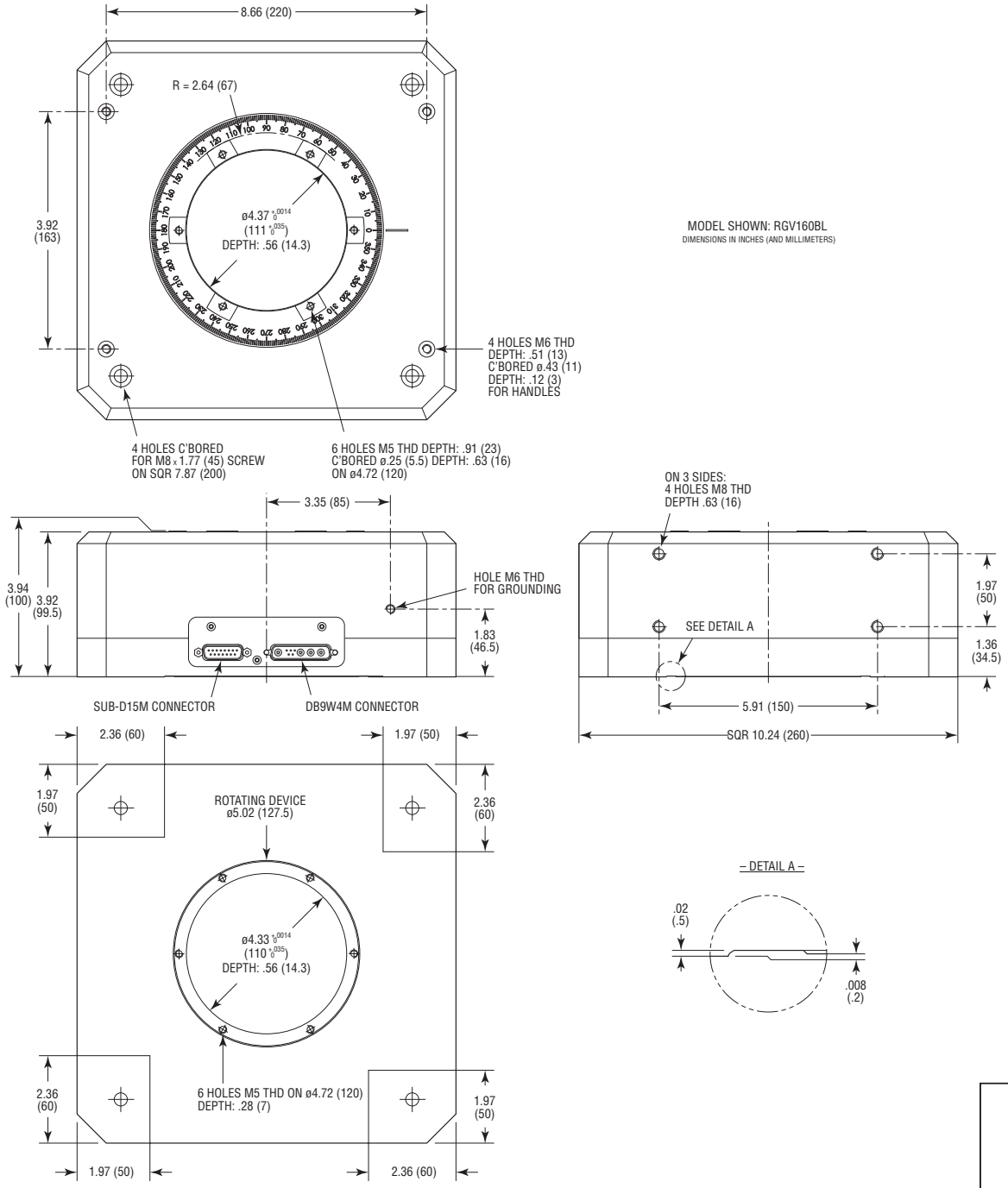

MODEL SHOWN: RGV160BL

DIMENSIONS IN INCHES (AND MILLIMETERS)

Newport