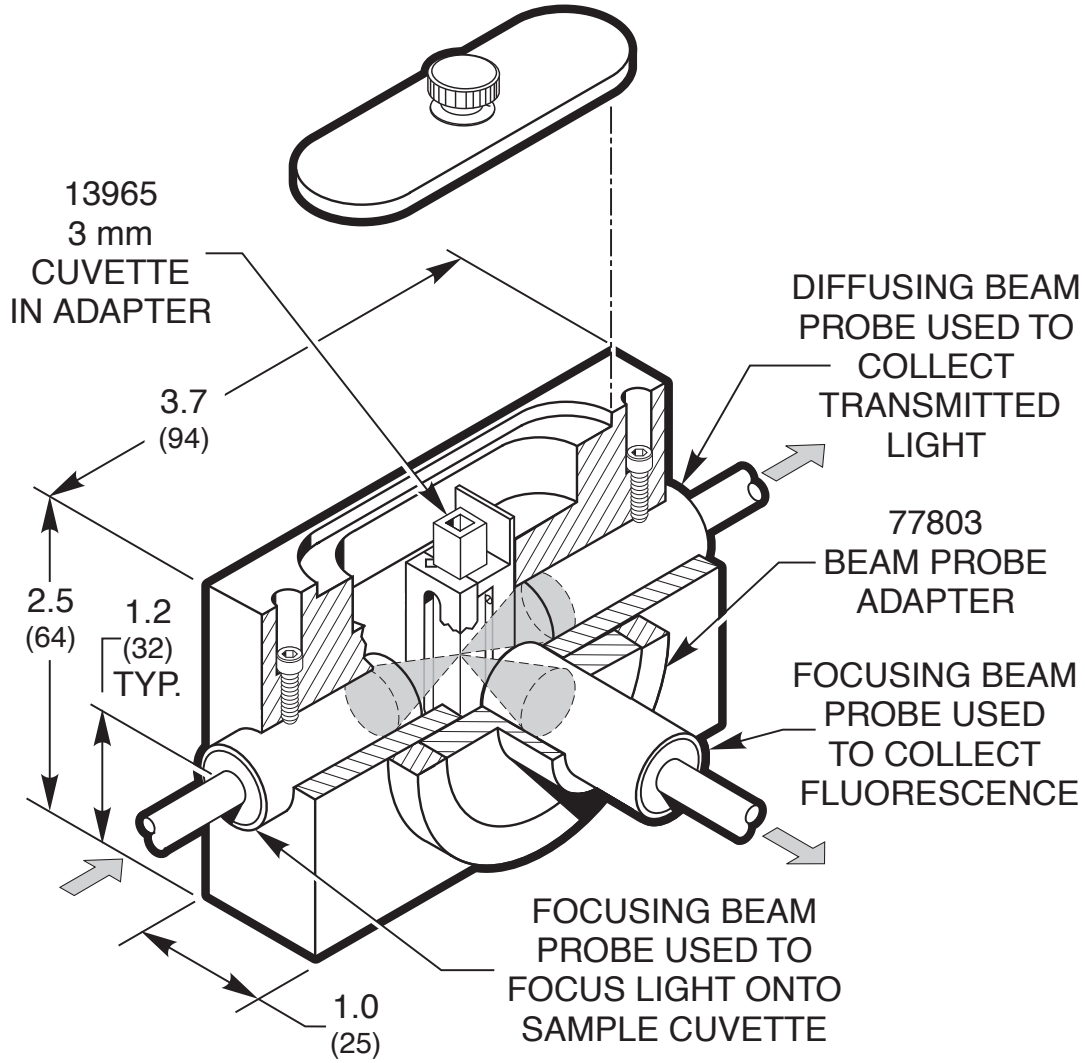
13965
3 mm
CUVETTE
IN ADAPTER
3.7
(94)
2.5
(64)
1.2
(32)
TYP.
1.0
(25)
DIFFUSING BEAM
PROBE USED TO
COLLECT
TRANSMITTED
LIGHT
77803
BEAM PROBE
ADAPTER
FOCUSING BEAM
PROBE USED
TO COLLECT
FLUORESCENCE
FOCUSING BEAM
PROBE USED TO
FOCUS LIGHT ONTO
SAMPLE CUVETTE

Newport