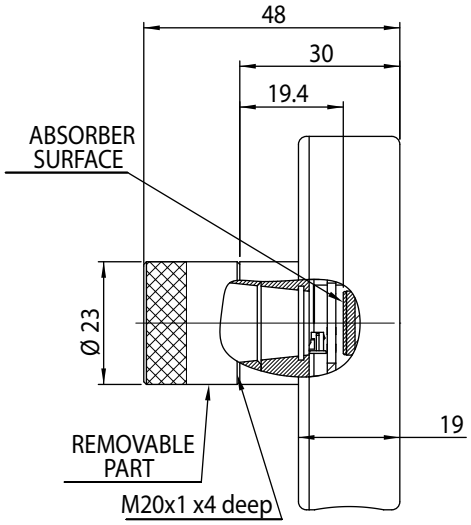
48
30
19.4
ABSORBER
SURFACE
Ø 23
19
REMOVABLE
PART
M20x1 x4 deep

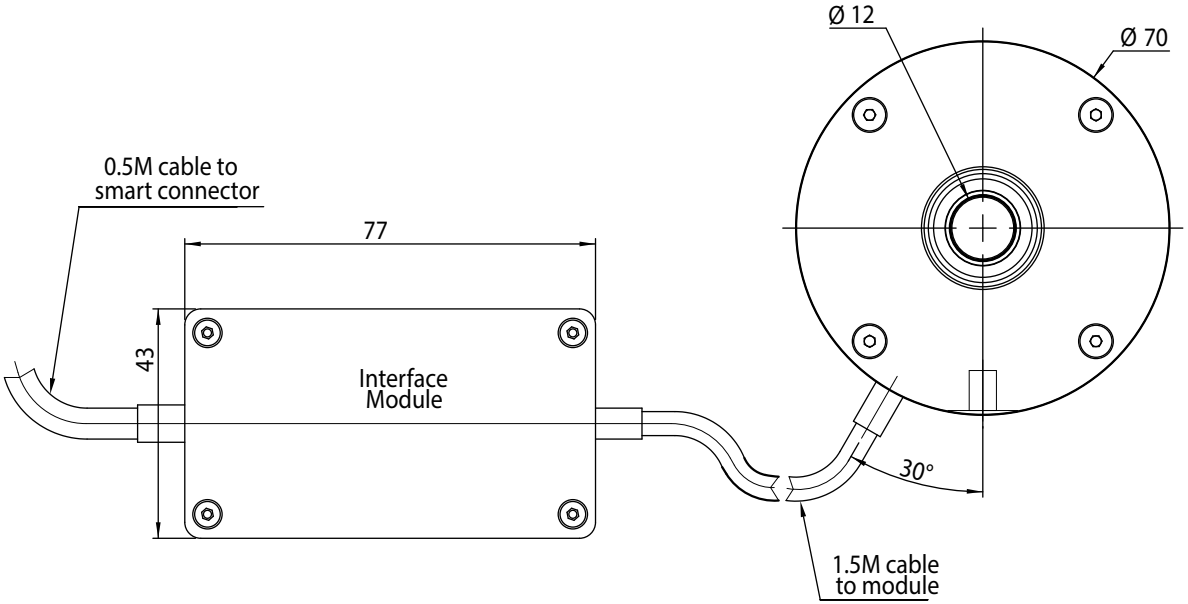
0.5M cable to
smart connector
77
43
Interface
Module
Ø 12
Ø 70
30°
1.5M cable
to module

Newport