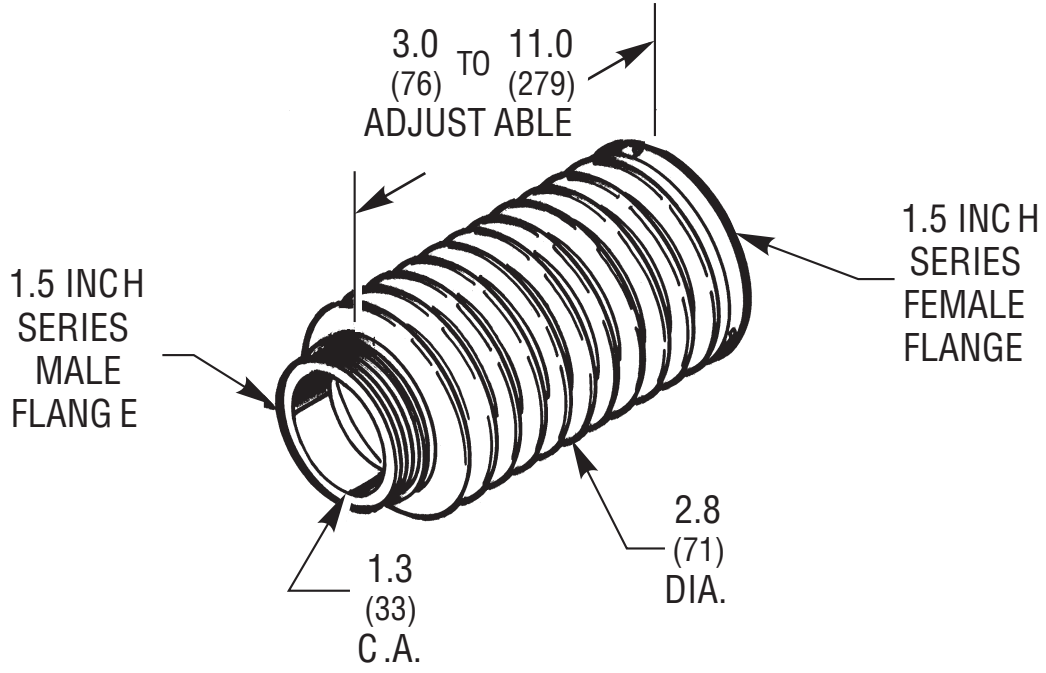
3.0
(76)
TO
11.0
(279)
ADJUST ABLE
1.5 INCH
SERIES
MALE
FLANGE
1.5 INCH
SERIES
FEMALE
FLANGE
2.8
(71)
DIA.
1.3
(33)
C.A.

Newport