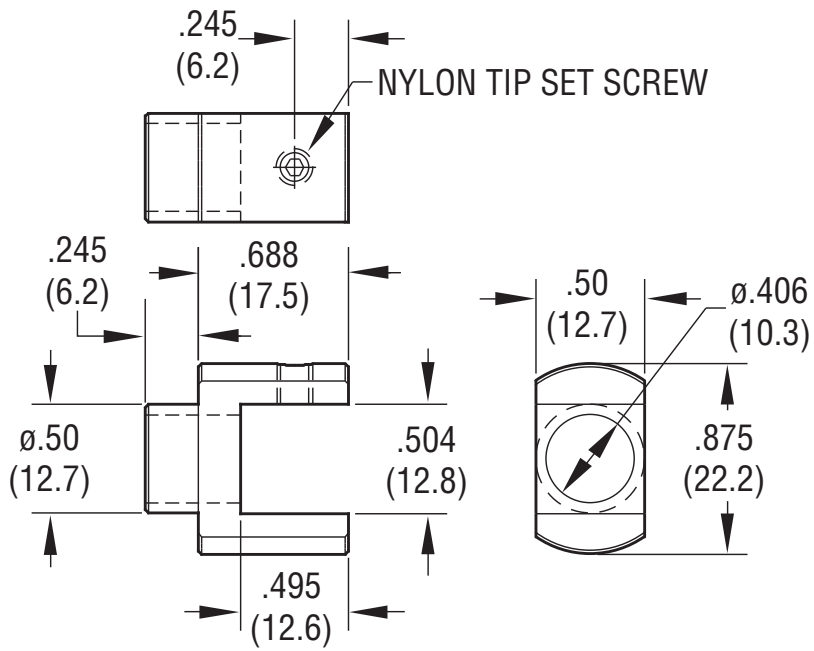
.245
(6.2)
NYLON TIP SET SCREW
.245
(6.2)
.688
(17.5)
.50
(12.7)
ø.406
(10.3)
ø.50
(12.7)
.504
(12.8)
.875
(22.2)
.495
(12.6)

Newport