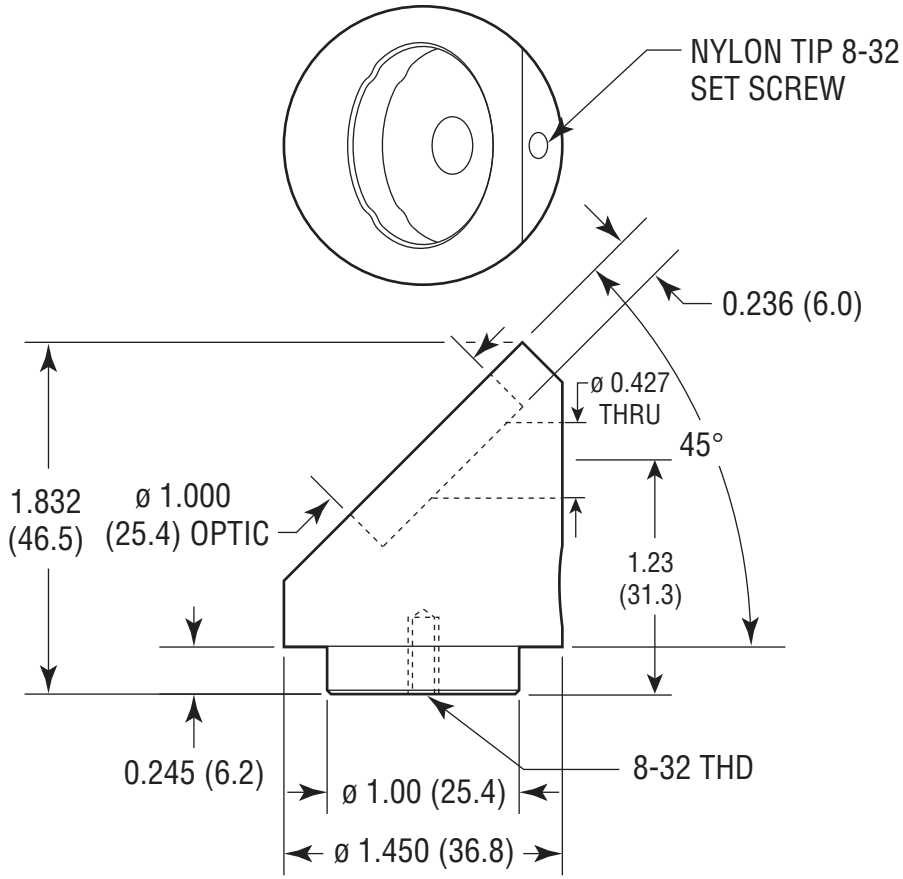
NYLON TIP 8-32
SET SCREW
0.236 (6.0)
ø 0.427
THRU
45°
1.832
(46.5)
ø 1.000
(25.4) OPTIC
1.23
(31.3)
0.245 (6.2)
8-32 THD
ø 1.00 (25.4)
ø 1.450 (36.8)

Newport