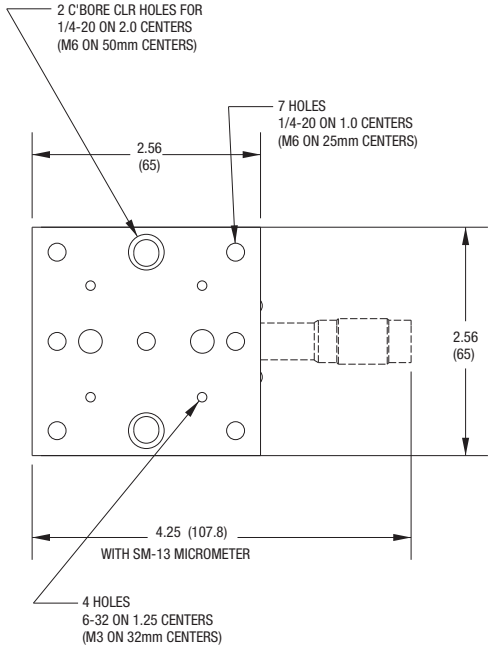

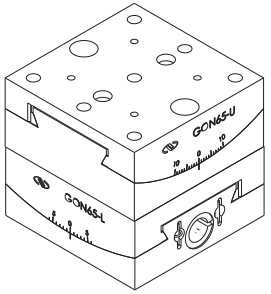

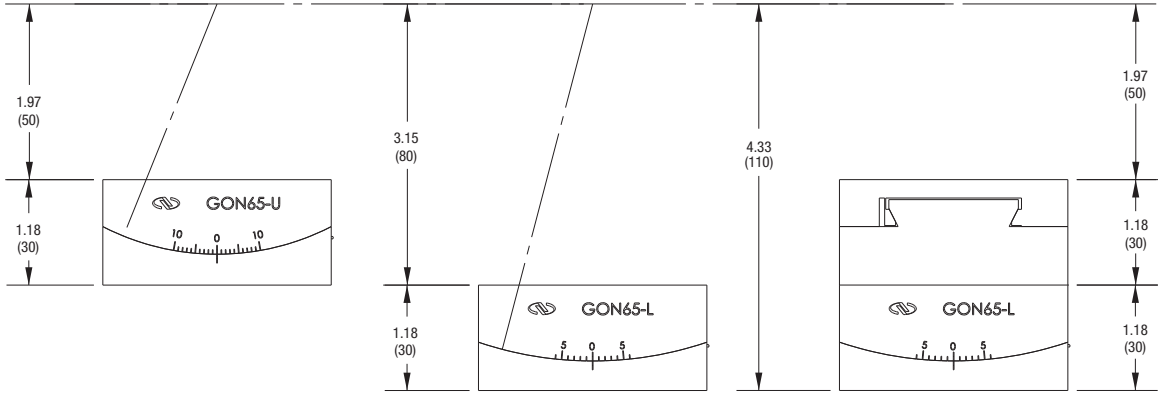

UPPER GON65

LOWER GON65

UPPER & LOWER GON65 STACK

Newport