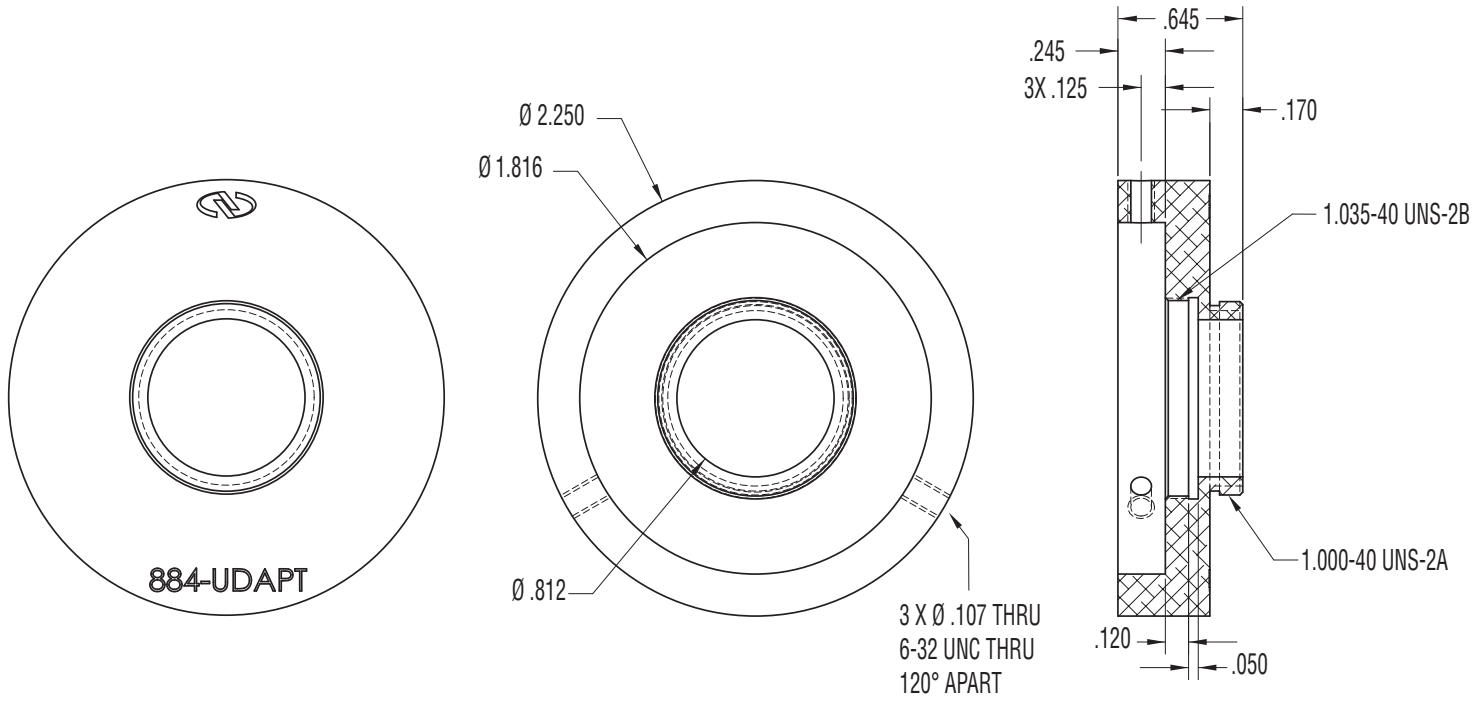
884-UDAPT
Ø 2.250
Ø 1.816
Ø .812
3 X Ø .107 THRU
6-32 UNC THRU
120° APART
.645
.245
3X .125
.170
1.035-40 UNS-2B
1.000-40 UNS-2A
.120
.050

Newport