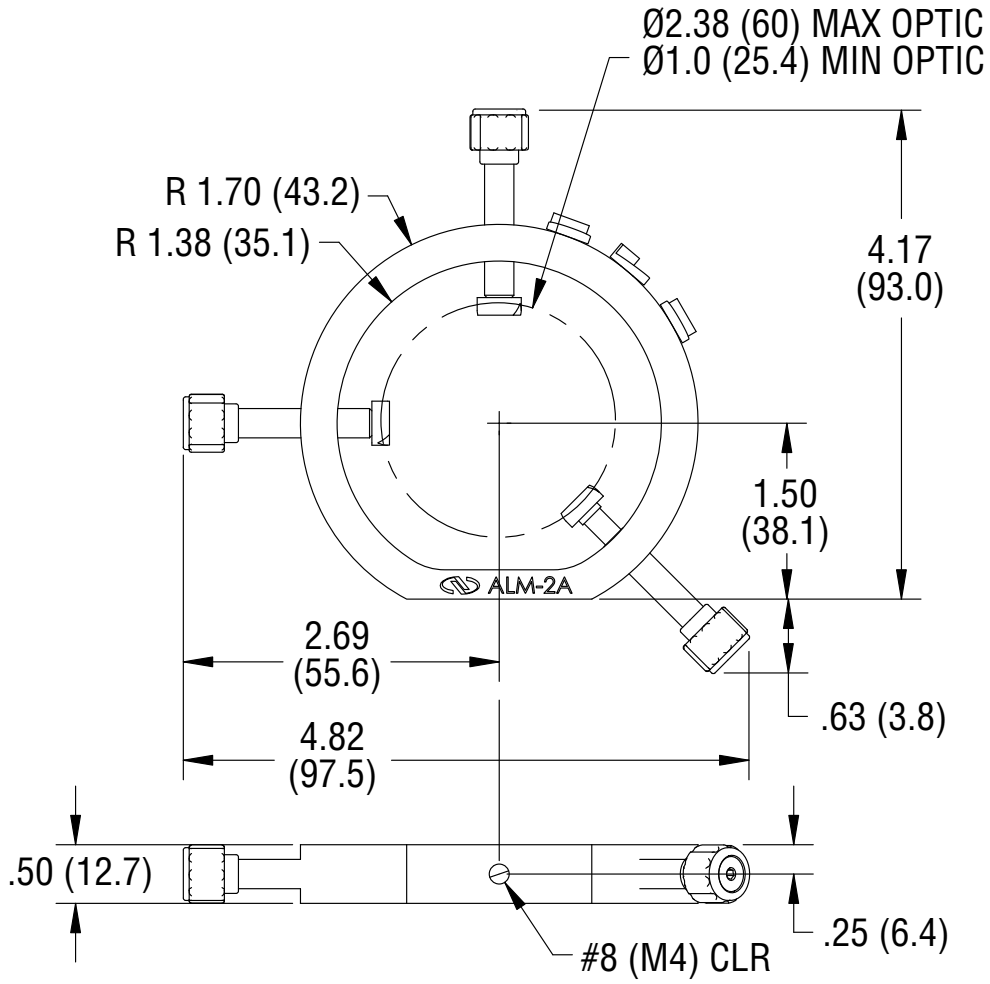
Ø2.38 (60) MAX OPTIC
Ø1.0 (25.4) MIN OPTIC
R 1.70 (43.2)
R 1.38 (35.1)
4.17
(93.0)
1.50
(38.1)
ALM-2A
2.69
(55.6)
.63 (3.8)
4.82
(97.5)
.50 (12.7)
.25 (6.4)
#8 (M4) CLR

Newport