DLS125 STAGE

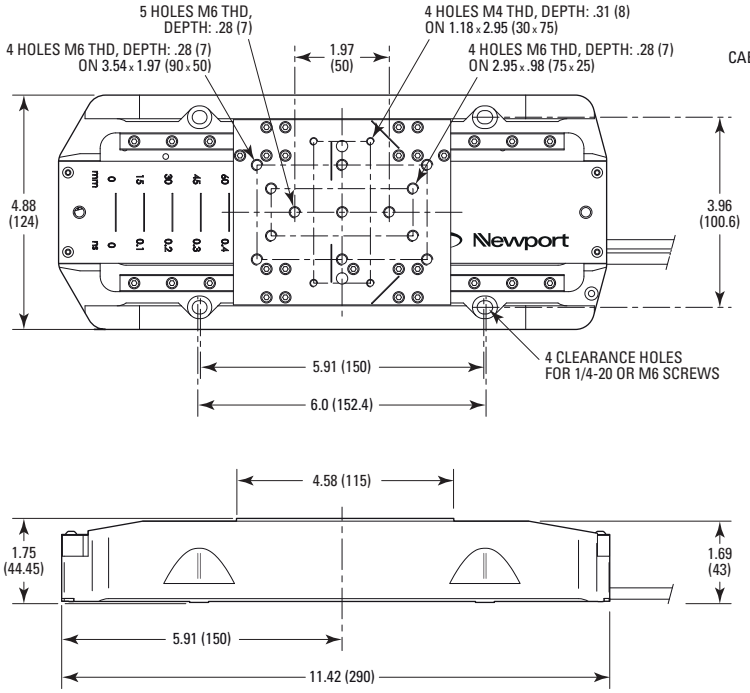

DLC CONTROLLER

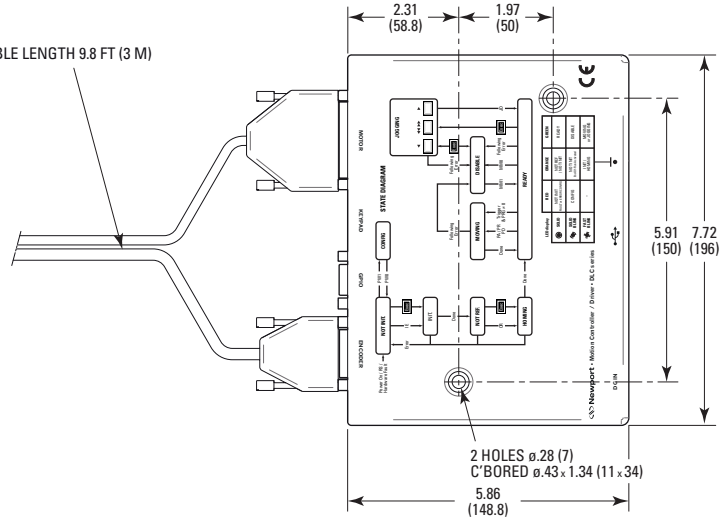

FRONT VIEW OF THE CONTROLLER

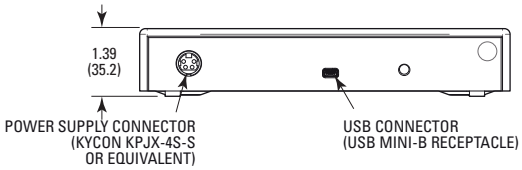

REAR VIEW OF THE CONTROLLER

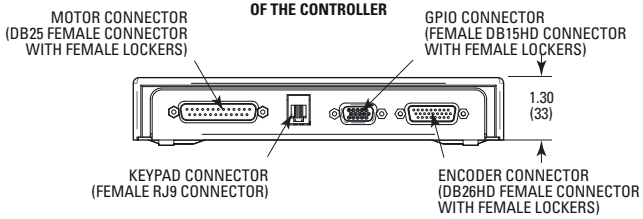

MODEL SHOWN: DL125

DIMENSIONS IN INCHES (AND MILLIMETERS)

Newport