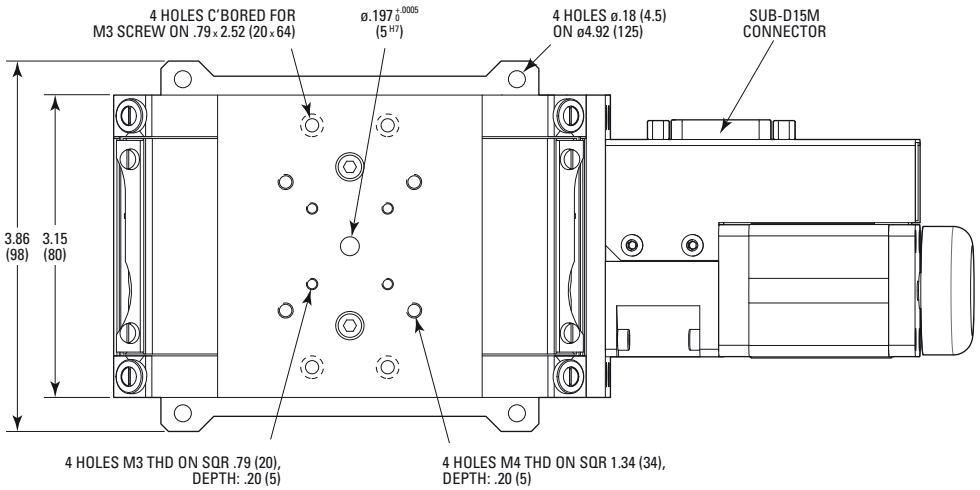

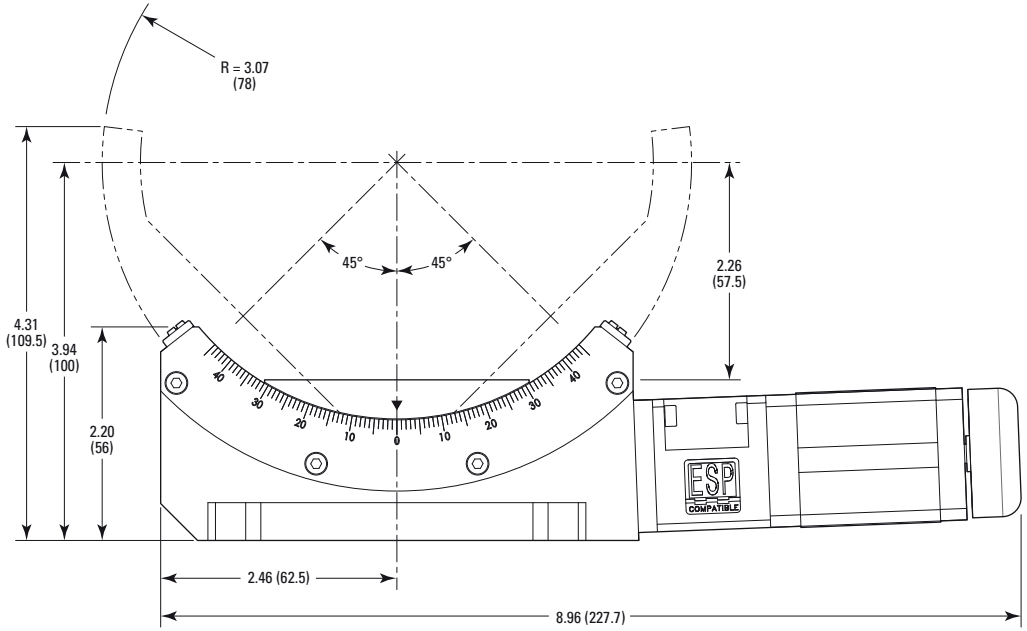

– BOTTOM VIEW –

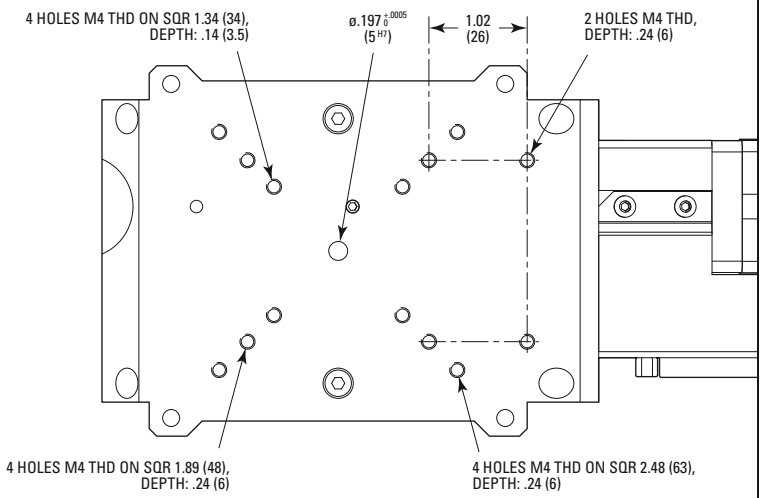

MODEL SHOWN: BGS80PP

DIMENSIONS IN INCHES (AND MILLIMETERS)

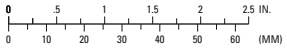

Newport