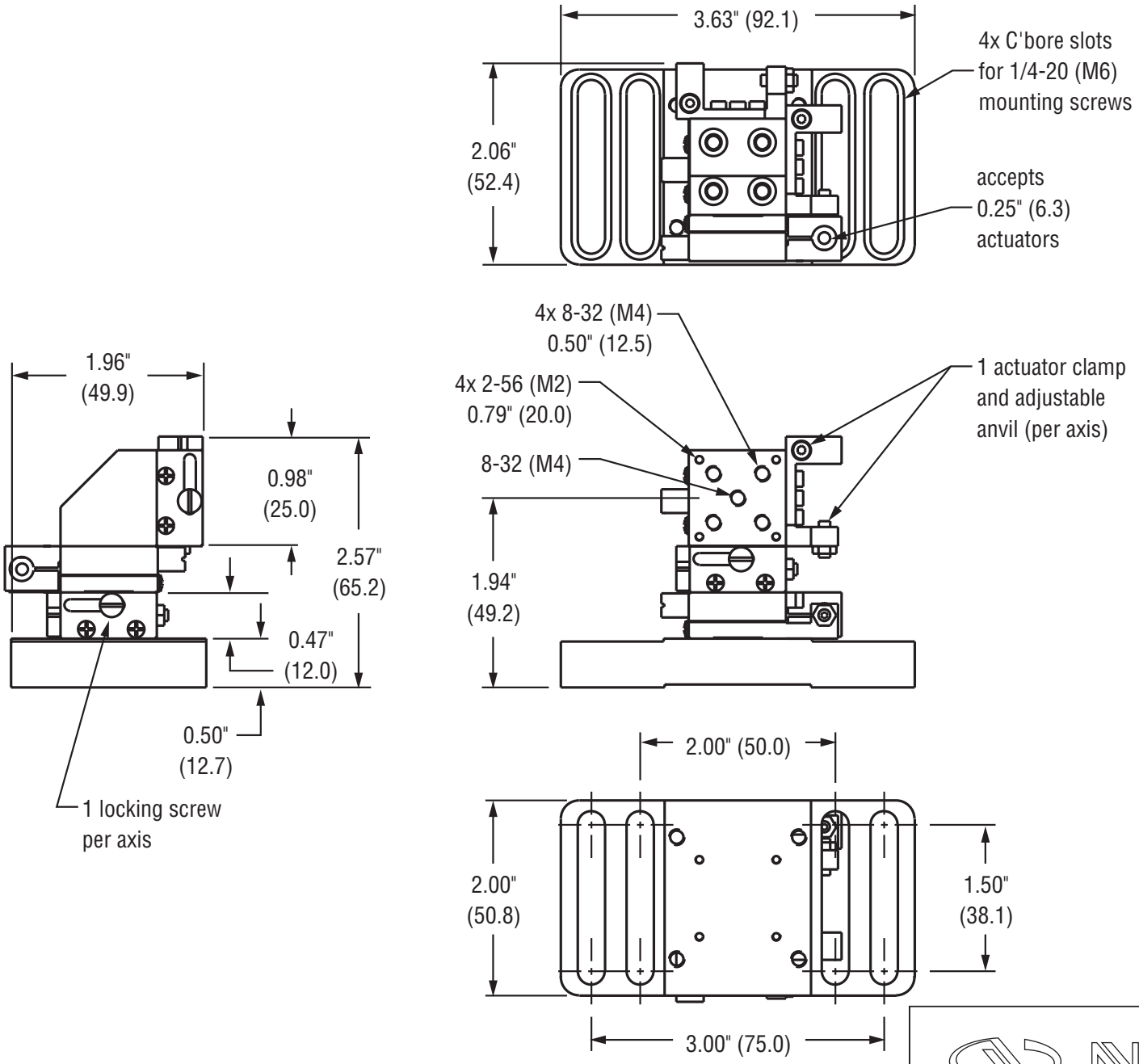
3.63" (92.1)
4x C'bore slots
for 1/4-20 (M6)
mounting screws
2.06"
(52.4)
accepts
0.25" (6.3)
actuators
4x 8-32 (M4)
0.50" (12.5)
4x 2-56 (M2)
0.79" (20.0)
8-32 (M4)
1 actuator clamp
and adjustable
anvil (per axis)
1.96"
(49.9)
0.98"
(25.0)
2.57"
(65.2)
1.94"
(49.2)
0.47"
(12.0)
0.50"
(12.7)
1 locking screw
per axis
2.00" (50.0)
2.00"
(50.8)
1.50"
(38.1)
3.00" (75.0)

Newport