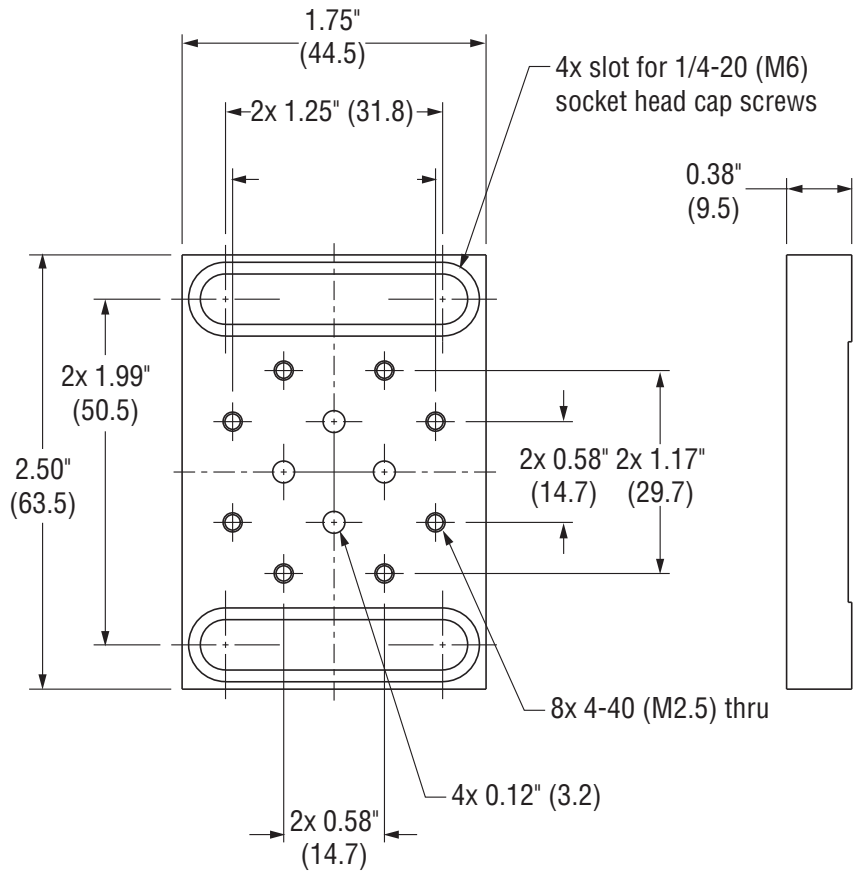
1.75"
(44.5)
2x 1.25" (31.8)
4x slot for 1/4-20 (M6)
socket head cap screws
0.38"
(9.5)
2x 1.99"
(50.5)
2.50"
(63.5)
2x 0.58"
(14.7)
2x 1.17"
(29.7)
8x 4-40 (M2.5) thru
4x 0.12" (3.2)
2x 0.58"
(14.7)

New Focus™