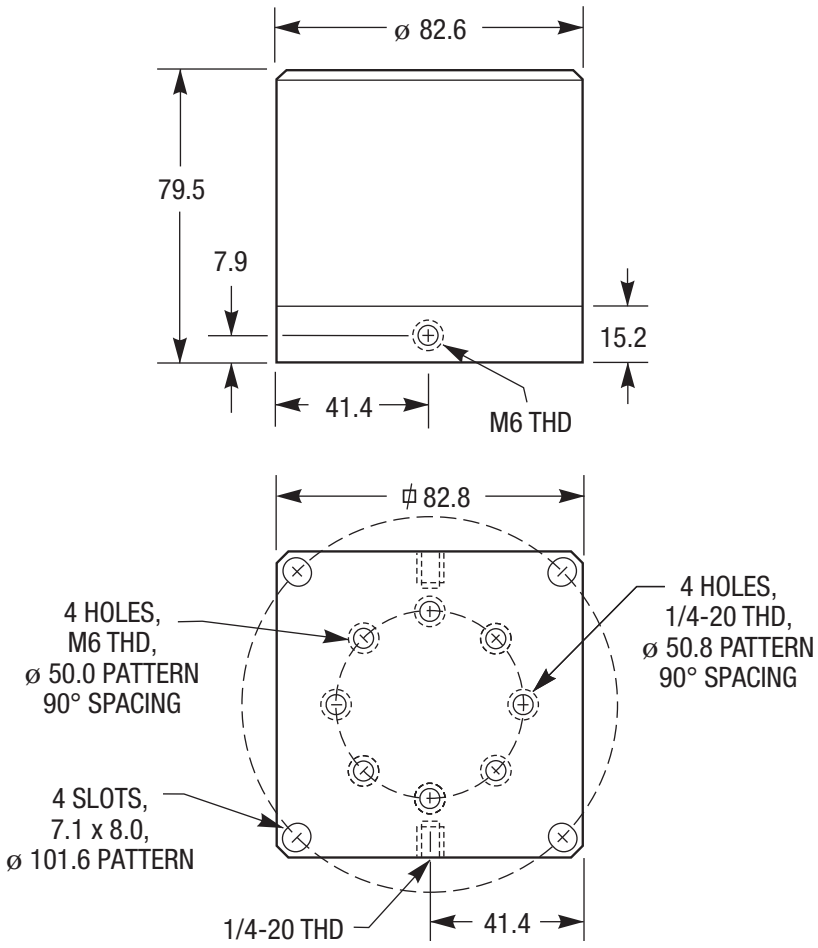
ø 82.6
79.5
7.9
15.2
41.4
M6 THD
ϕ 82.8
4 HOLES,
M6 THD,
ø 50.0 PATTERN
90° SPACING
4 HOLES,
1/4-20 THD,
ø 50.8 PATTERN
90° SPACING
4 SLOTS,
7.1 x 8.0,
ø 101.6 PATTERN
1/4-20 THD
41.4

Newport