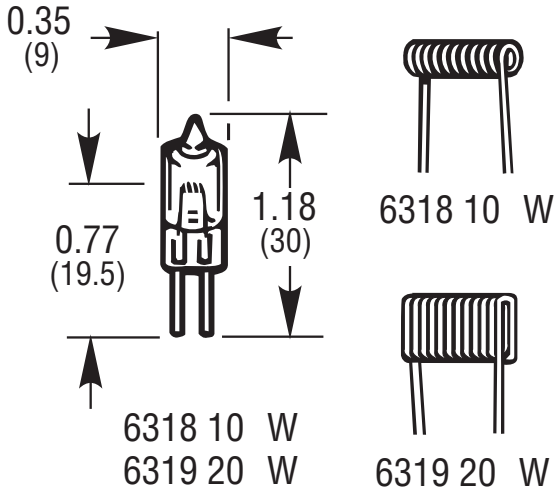
0.35
(9)
0.77
(19.5)
1.18
(30)
6318 10 W
6319 20 W
6318 10 W
6319 20 W

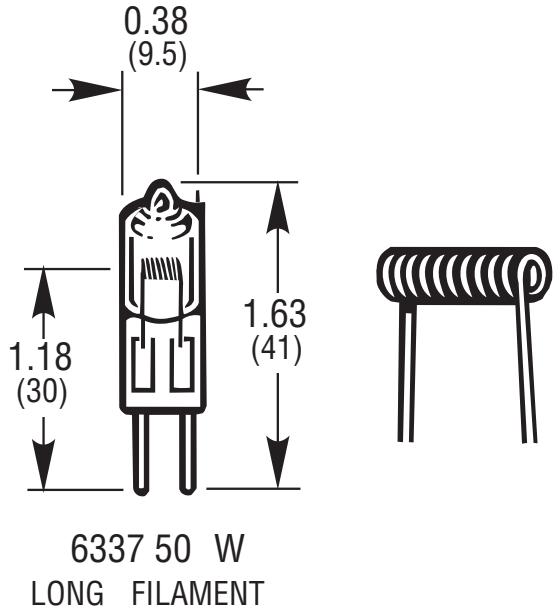
0.38
(9.5)
1.18
(30)
1.63
(41)
6337 50 W
LONG FILAMENT

Newport