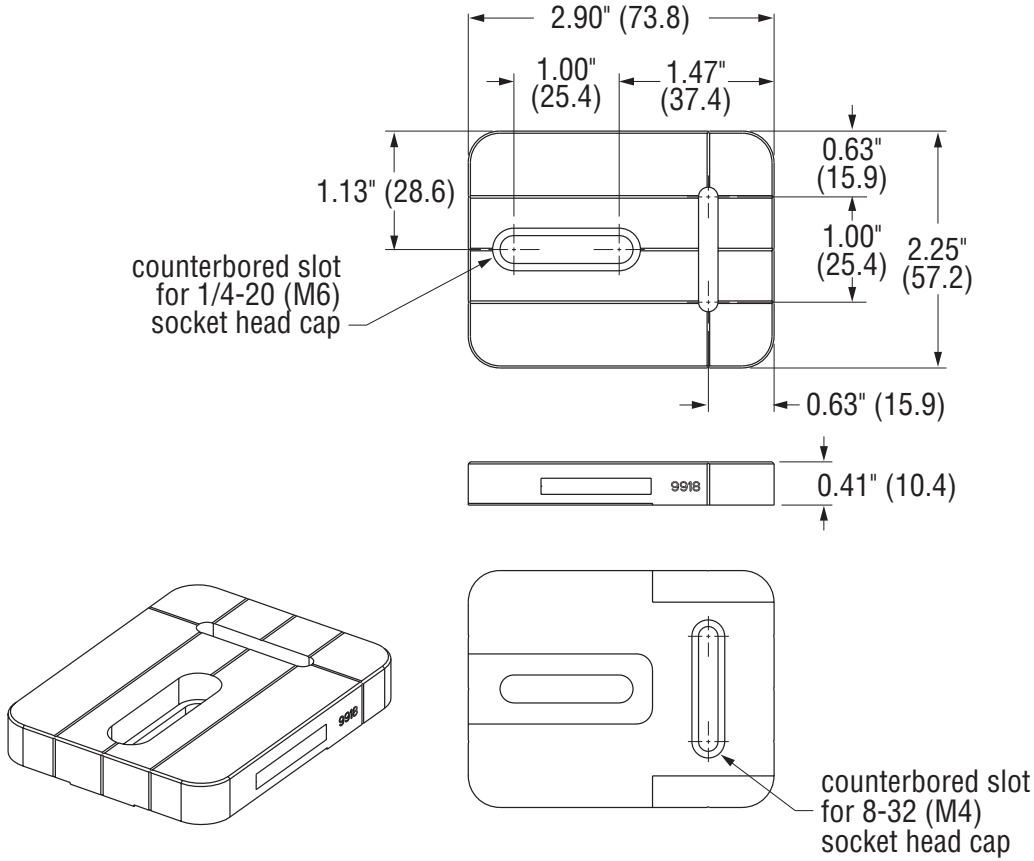
2.90" (73.8)
1.00" (25.4)
1.47" (37.4)
0.63" (15.9)
1.13" (28.6)
1.00" (25.4)
2.25" (57.2)
counterbored slot for 1/4-20 (M6) socket head cap
0.63" (15.9)
9918
0.41" (10.4)
9918
counterbored slot for 8-32 (M4) socket head cap

New Focus™