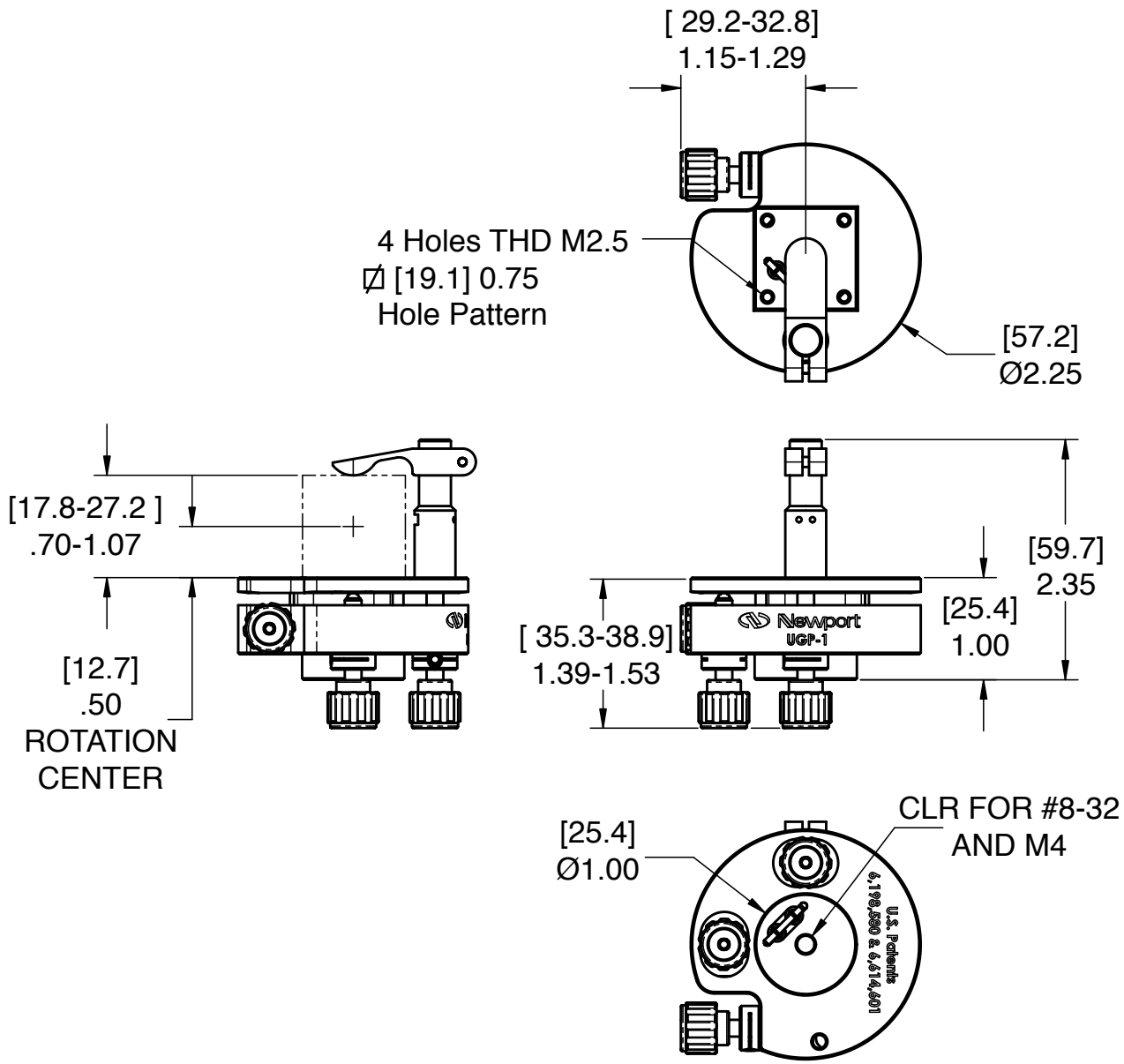
[29.2-32.8]
1.15-1.29
4 Holes THD M2.5
⌀ [19.1] 0.75
Hole Pattern
[57.2]
Ø2.25
[17.8-27.2]
.70-1.07
[12.7]
.50
ROTATION
CENTER
[59.7]
2.35
[25.4]
1.00
[35.3-38.9]
1.39-1.53
Newport
UGP-1
CLR FOR #8-32
AND M4
[25.4]
Ø1.00
U.S. Patents
6,198,580 & 6,614,601

Newport®