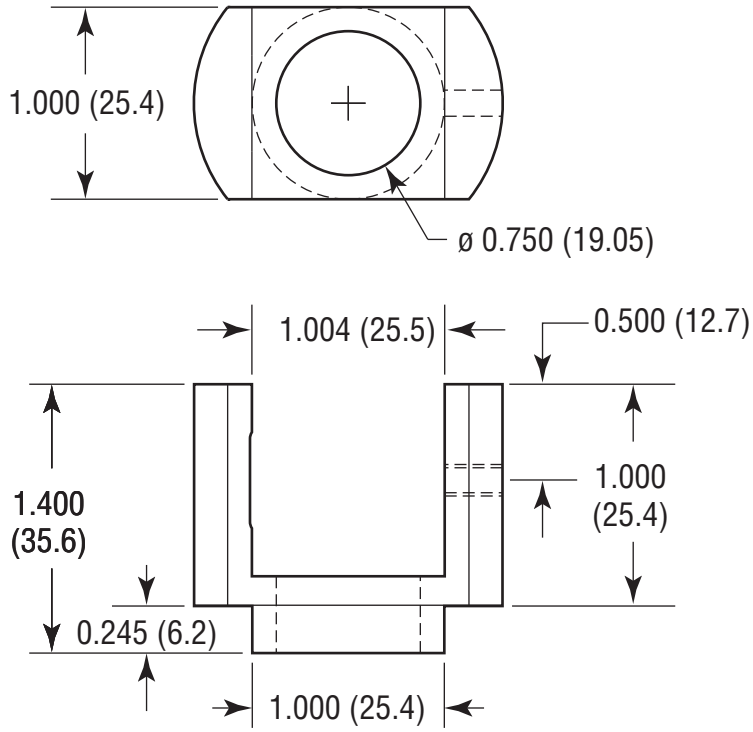
1.000 (25.4)
ø 0.750 (19.05)
1.004 (25.5)
0.500 (12.7)
1.400
(35.6)
1.000
(25.4)
0.245 (6.2)
1.000 (25.4)

Newport