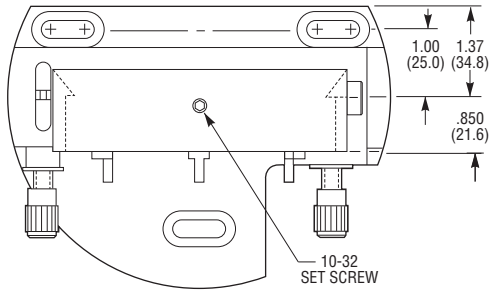
1.00
(25.0)
1.37
(34.8)
.850
(21.6)
10-32
SET SCREW

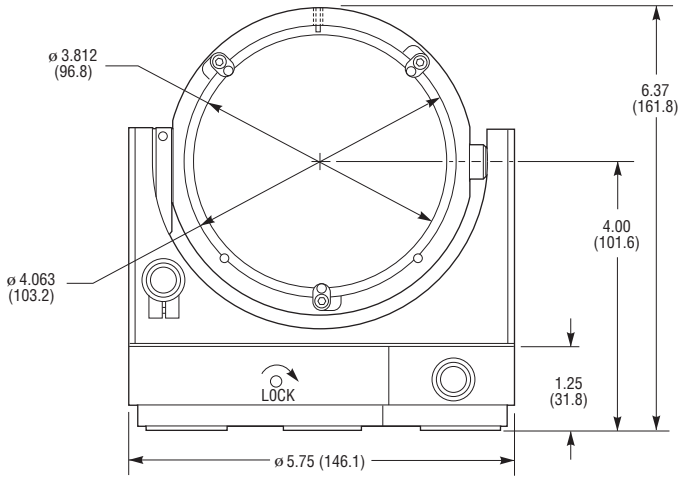
ø 3.812
(96.8)
ø 4.063
(103.2)
6.37
(161.8)
4.00
(101.6)
1.25
(31.8)
LOCK
ø 5.75 (146.1)

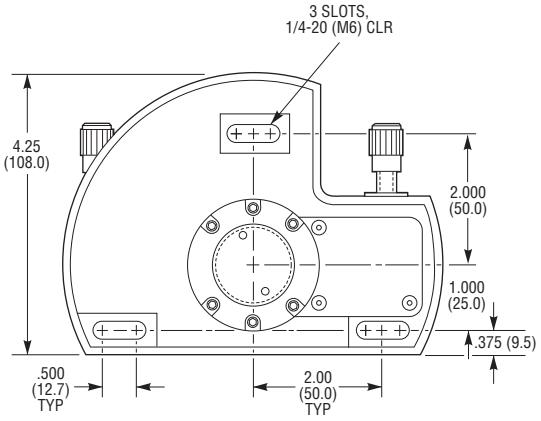
3 SLOTS,
1/4-20 (M6) CLR
4.25
(108.0)
2.000
(50.0)
1.000
(25.0)
.375 (9.5)
.500
(12.7)
TYP
2.00
(50.0)
TYP

Newport