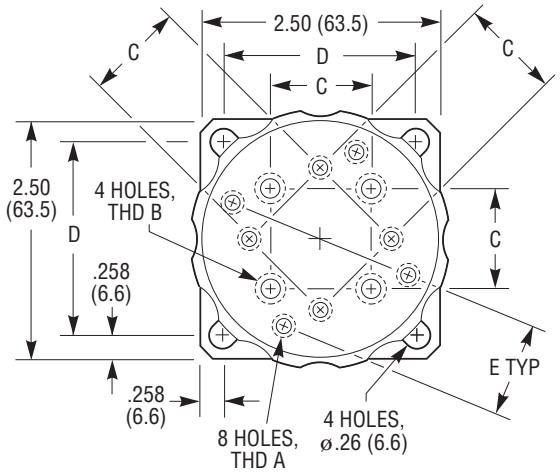

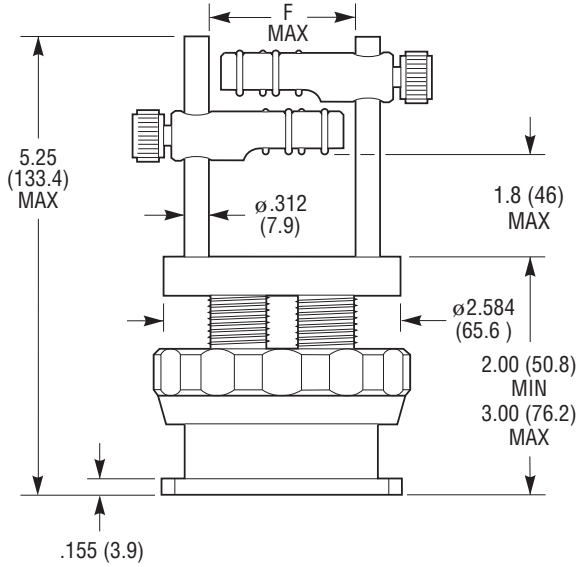

Model	A	B	C	D	E	F
488	8-32	1/4-20	1.0 in.	2.0 in.	0.937 in.	1.56 in.
M-488	M4	M6	25 mm	50 mm	24 mm	40.1 mm

Newport