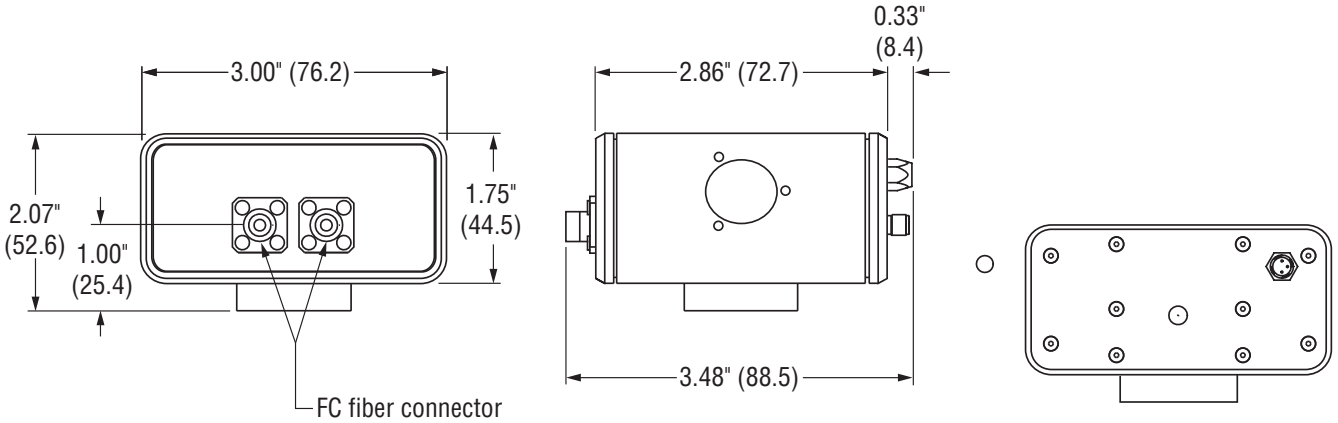
3.00" (76.2)
2.07"
(52.6)
1.00"
(25.4)
1.75"
(44.5)
FC fiber connector
2.86" (72.7)
0.33"
(8.4)
3.48" (88.5)

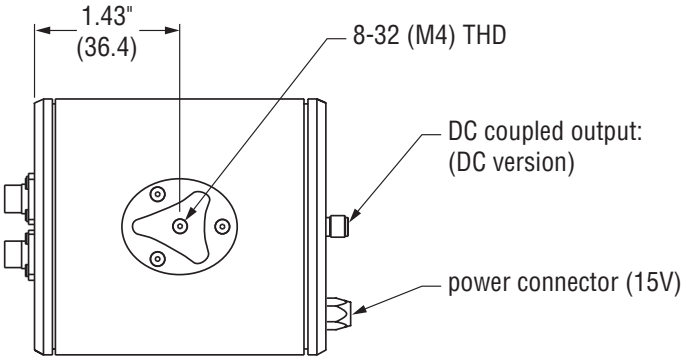
1.43"
(36.4)
8-32 (M4) THD
DC coupled output:
(DC version)
power connector (15V)

New Focus™