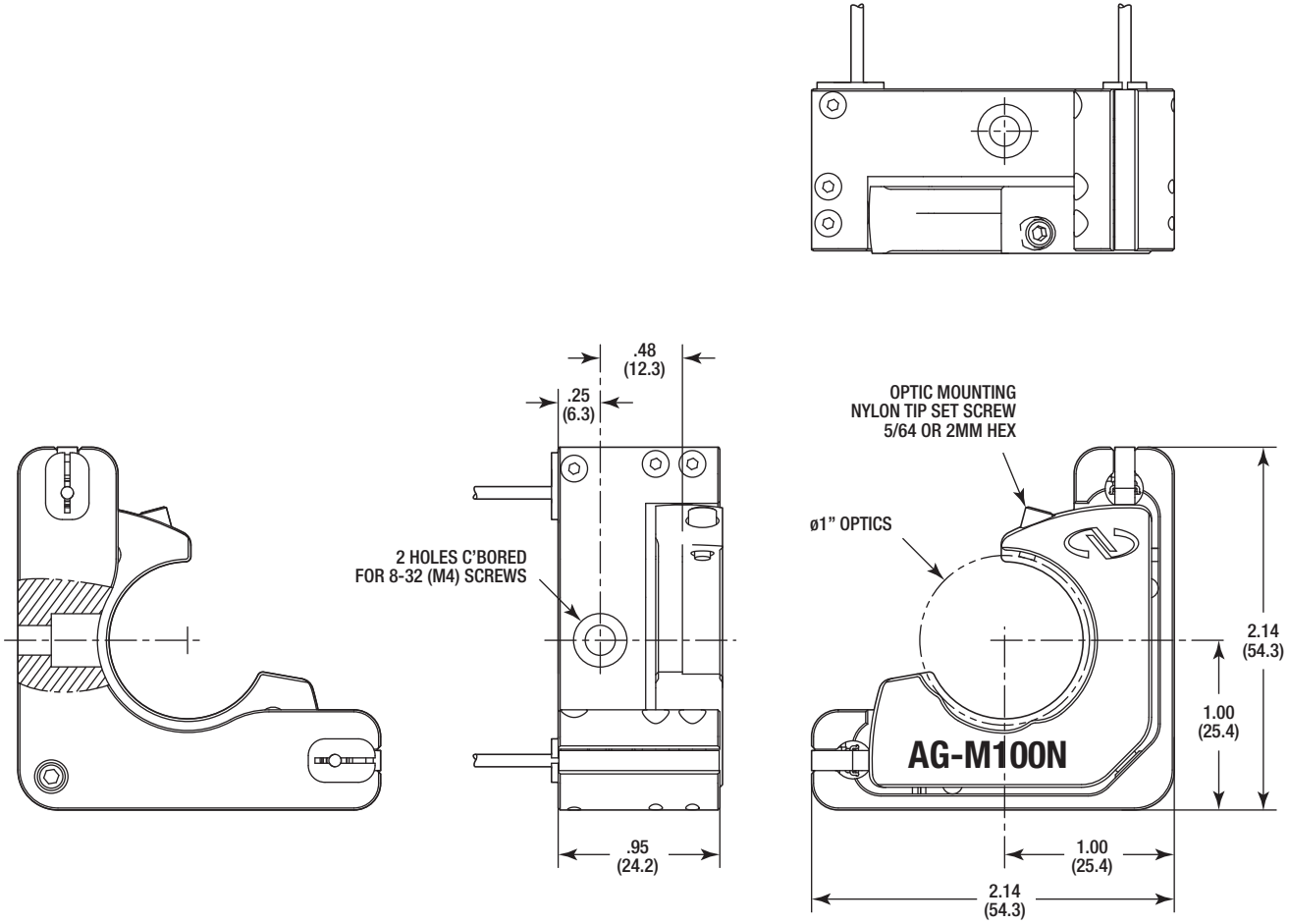
.48
(12.3)
.25
(6.3)
OPTIC MOUNTING
NYLON TIP SET SCREW
5/64 OR 2MM HEX
ø1" OPTICS
2 HOLES C'BORED
FOR 8-32 (M4) SCREWS
2.14
(54.3)
1.00
(25.4)
AG-M100N
.95
(24.2)
1.00
(25.4)
2.14
(54.3)

Newport