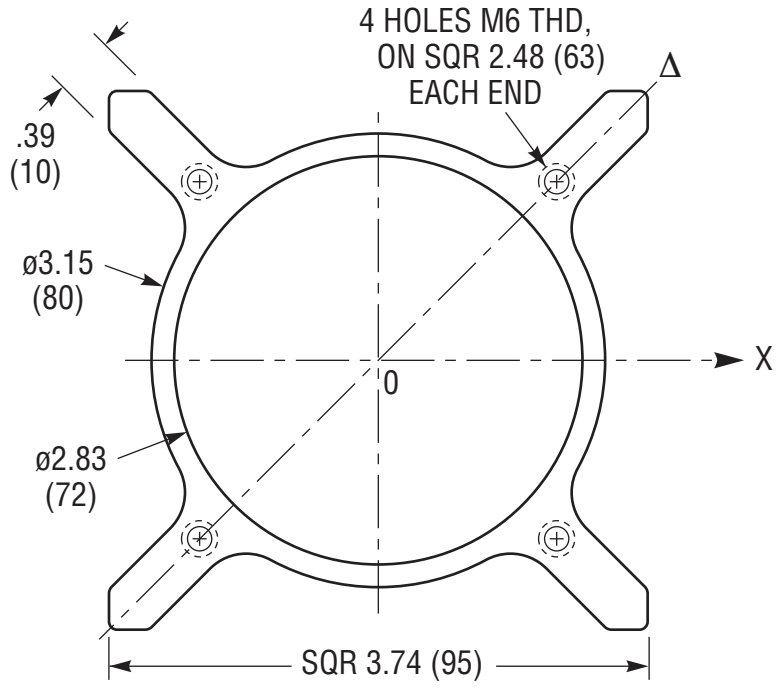
4 HOLES M6 THD,
ON SQR 2.48 (63)
EACH END
Δ
.39
(10)
ø3.15
(80)
X
0
ø2.83
(72)
SQR 3.74 (95)

Newport