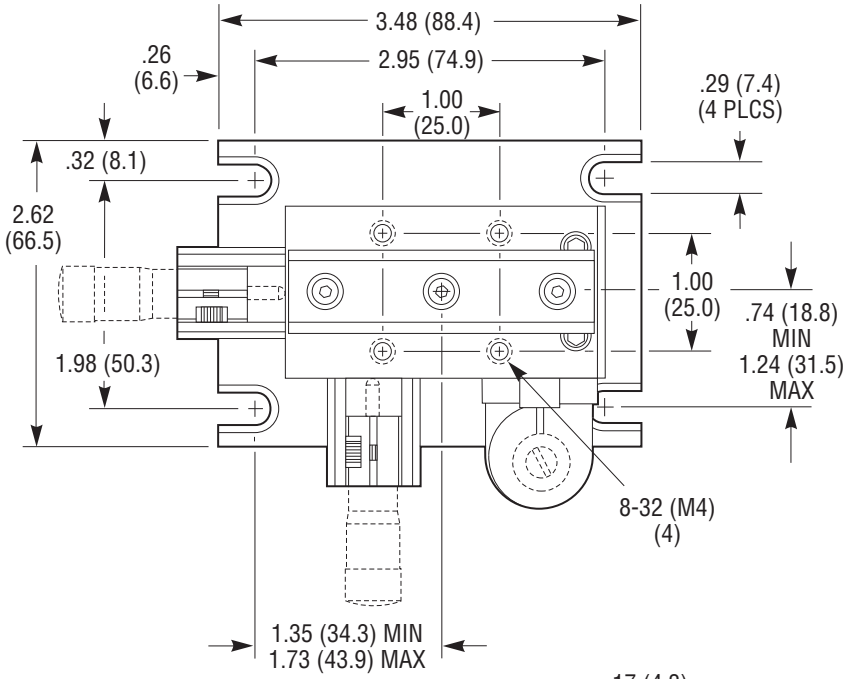
3.48 (88.4)
2.95 (74.9)
.26
(6.6)
1.00
(25.0)
.29 (7.4)
(4 PLCS)
.32 (8.1)
2.62
(66.5)
1.00
(25.0)
.74 (18.8)
MIN
1.24 (31.5)
MAX
1.98 (50.3)
8-32 (M4)
(4)
1.35 (34.3) MIN
1.73 (43.9) MAX

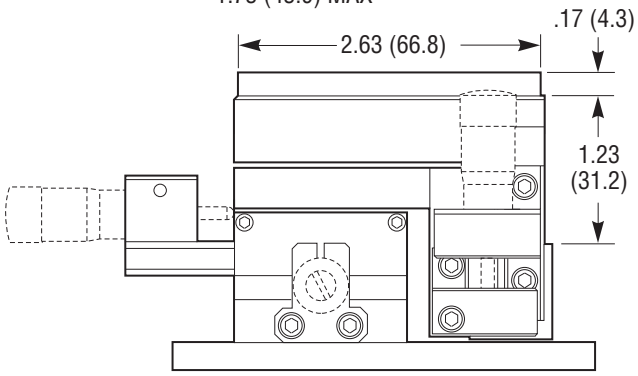
2.63 (66.8)
.17 (4.3)
1.23
(31.2)

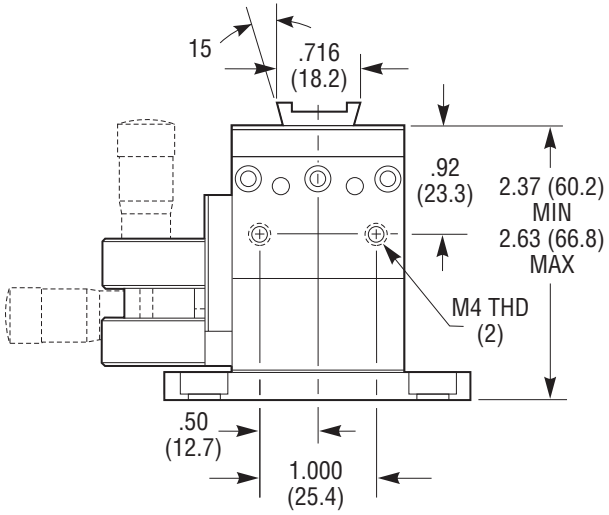
15
.716
(18.2)
.92
(23.3)
2.37 (60.2)
MIN
2.63 (66.8)
MAX
M4 THD
(2)
.50
(12.7)
1.000
(25.4)

Newport