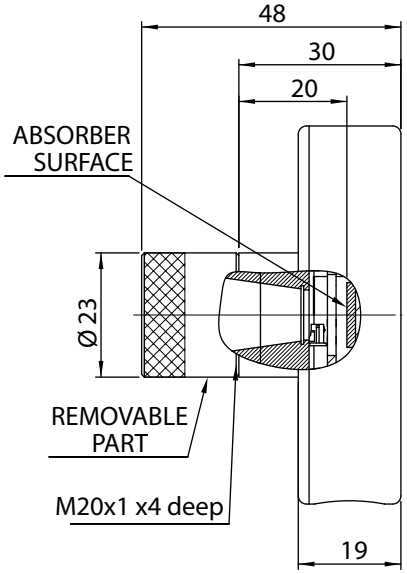
48
30
20
ABSORBER
SURFACE
Ø 23
REMOVABLE
PART
M20x1 x4 deep
19

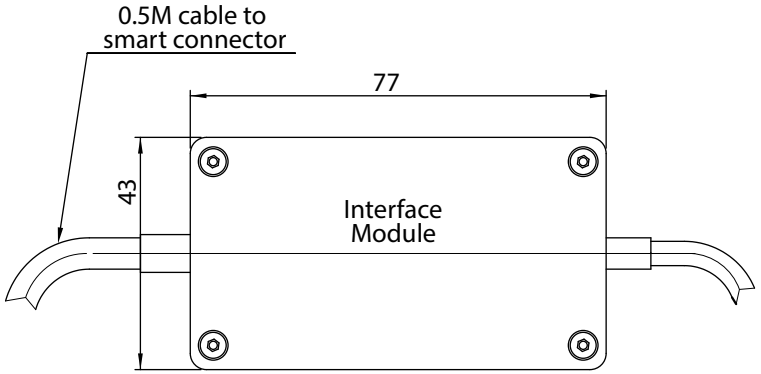
0.5M cable to
smart connector
77
43
Interface
Module

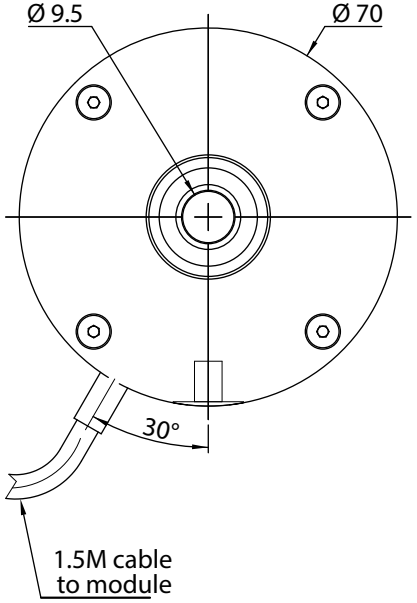
Ø 9.5
Ø 70
30°
1.5M cable
to module

Newport