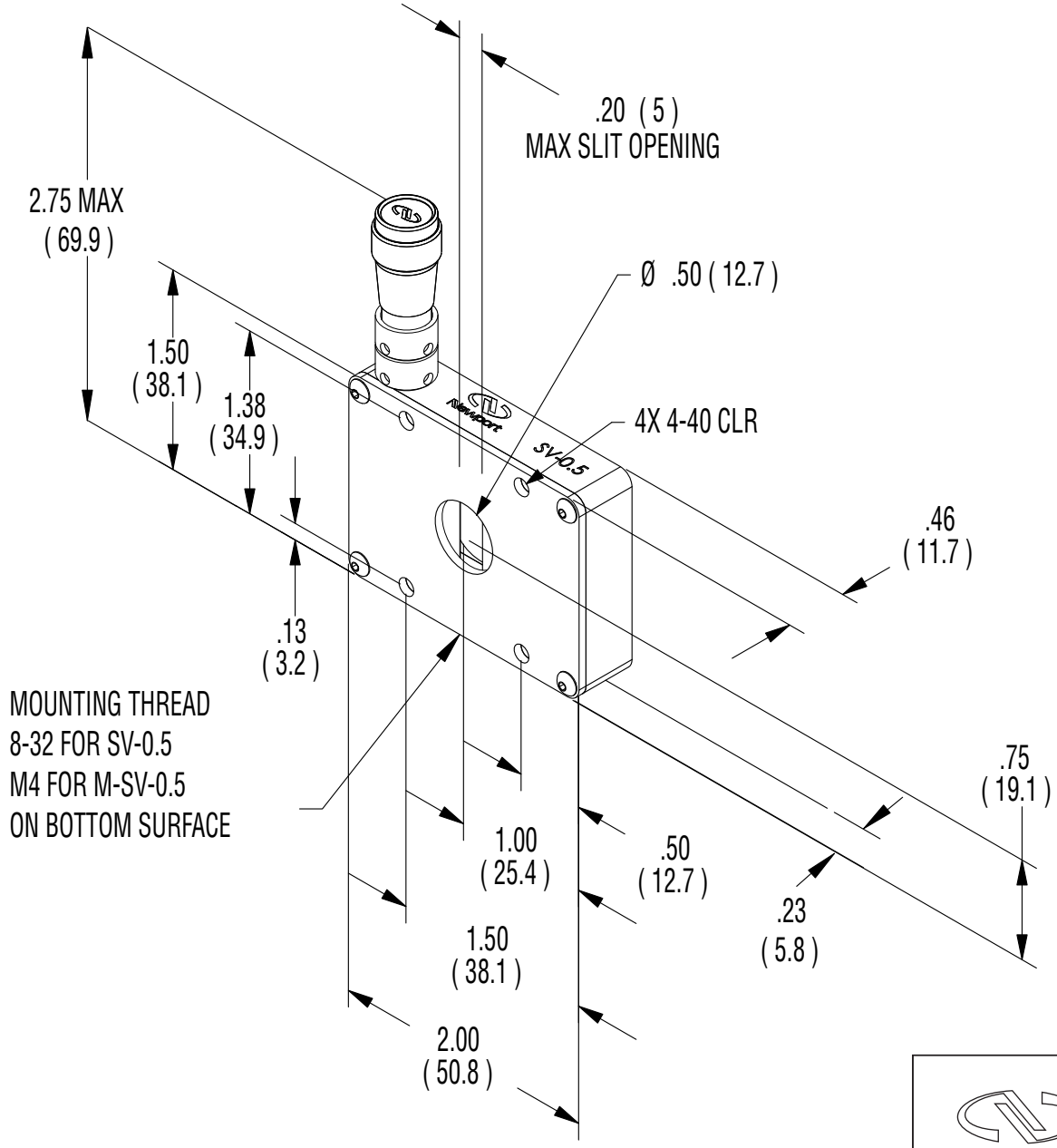
.20 (5)
MAX SLIT OPENING
2.75 MAX
(69.9)
Ø .50 (12.7)
1.50
(38.1)
1.38
(34.9)
4X 4-40 CLR
SV-0.5
.46
(11.7)
.13
(3.2)
MOUNTING THREAD
8-32 FOR SV-0.5
M4 FOR M-SV-0.5
ON BOTTOM SURFACE
.75
(19.1)
1.00
(25.4)
.50
(12.7)
.23
(5.8)
1.50
(38.1)
2.00
(50.8)

Newport