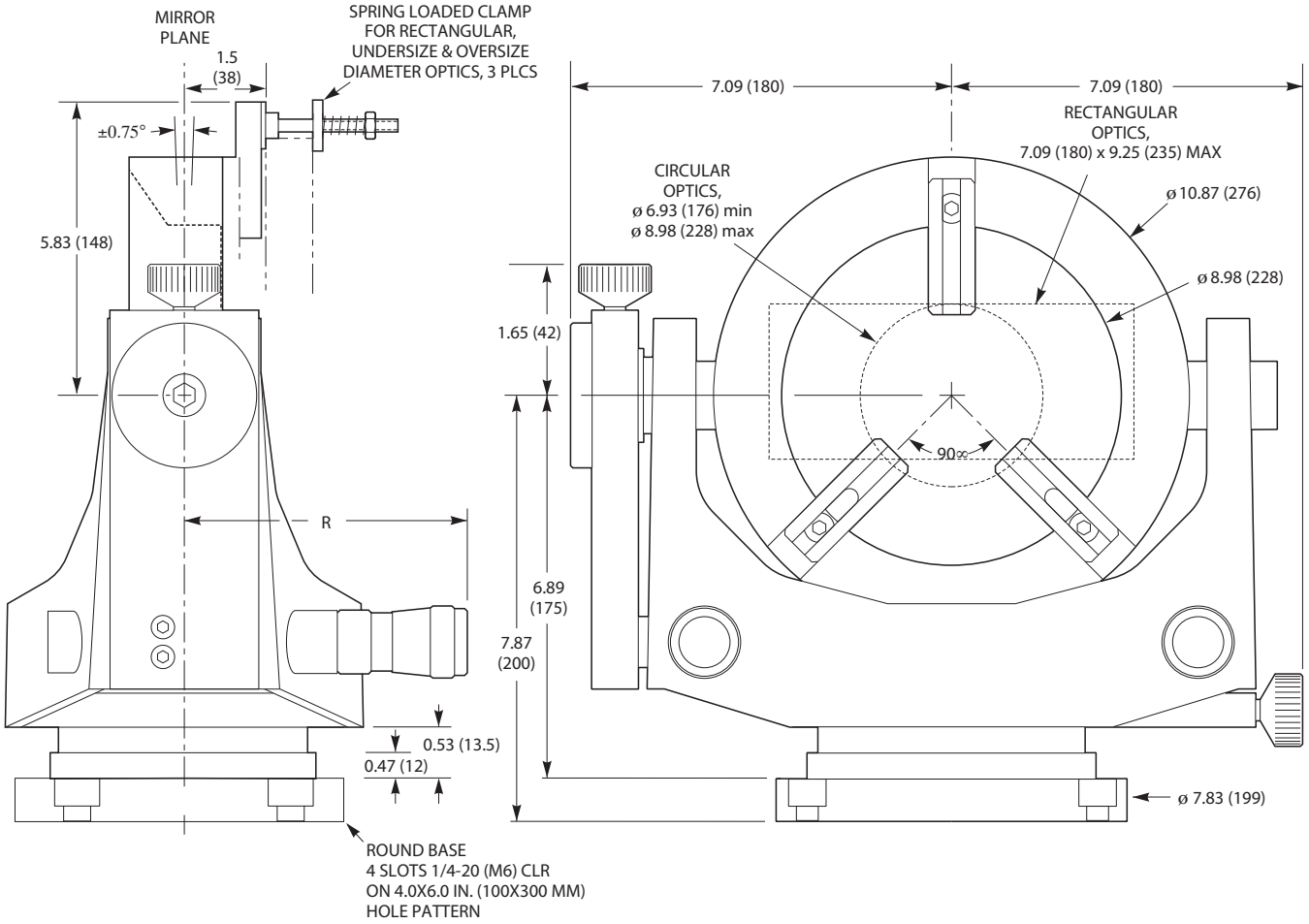
MIRROR PLANE
1.5 (38)
SPRING LOADED CLAMP FOR RECTANGULAR, UNDERSIZE & OVERSIZE DIAMETER OPTICS, 3 PLCS
±0.75°
5.83 (148)
R
0.53 (13.5)
0.47 (12)
ROUND BASE
4 SLOTS 1/4-20 (M6) CLR
ON 4.0X6.0 IN. (100X300 MM)
HOLE PATTERN
7.09 (180)
7.09 (180)
RECTANGULAR OPTICS, 7.09 (180) x 9.25 (235) MAX
CIRCULAR OPTICS, ø 6.93 (176) min ø 8.98 (228) max
ø 10.87 (276)
ø 8.98 (228)
1.65 (42)
90°
6.89 (175)
7.87 (200)
ø 7.83 (199)

Newport®