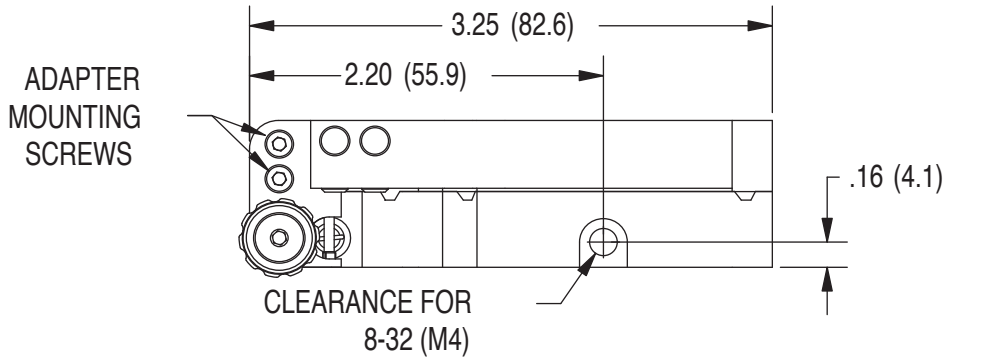
3.25 (82.6)
2.20 (55.9)
ADAPTER
MOUNTING
SCREWS
.16 (4.1)
CLEARANCE FOR
8-32 (M4)

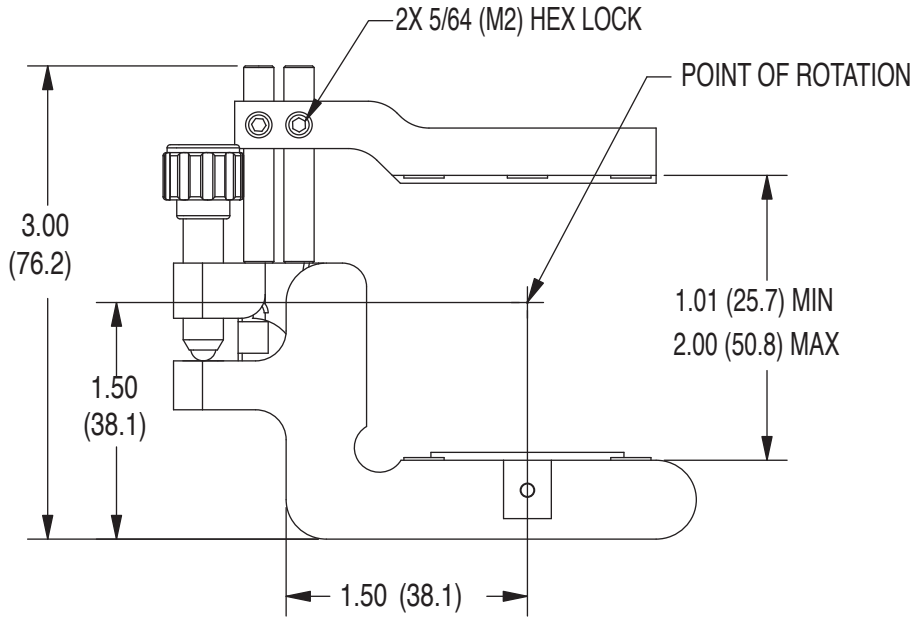
2X 5/64 (M2) HEX LOCK
POINT OF ROTATION
3.00
(76.2)
1.50
(38.1)
1.01 (25.7) MIN
2.00 (50.8) MAX
1.50 (38.1)

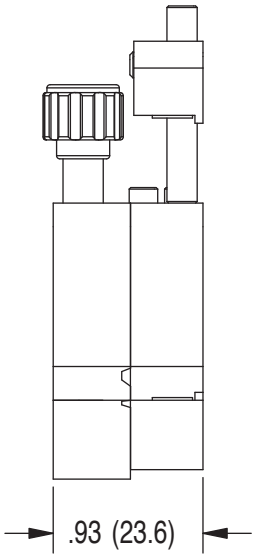
.93 (23.6)

Newport