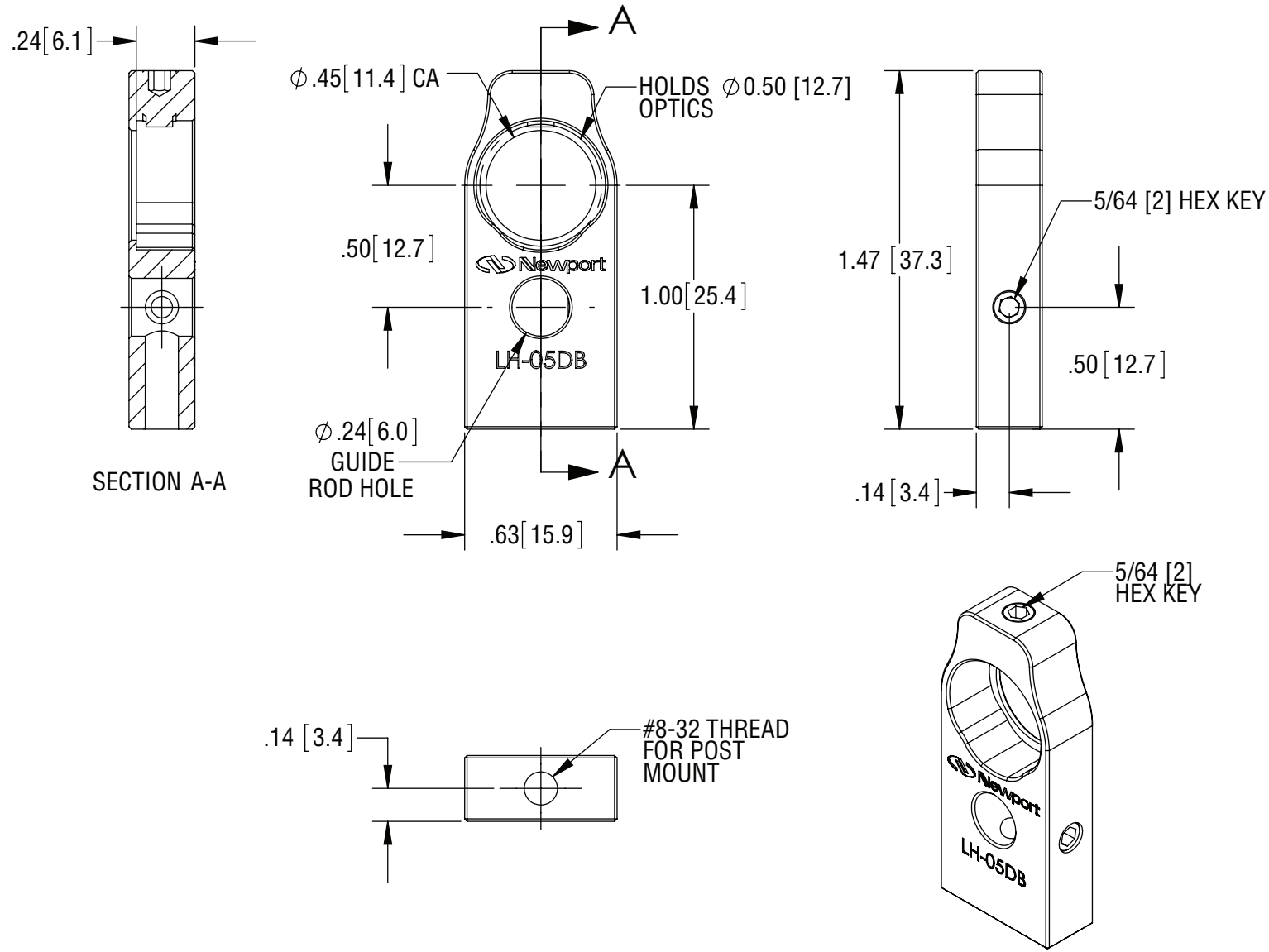
.24[6.1]
SECTION A-A
A
∅.45[11.4] CA
HOLDS ∅0.50 [12.7]
OPTICS
.50[12.7]
Newport
1.00[25.4]
LH-05DB
∅.24[6.0]
GUIDE
ROD HOLE
A
.63[15.9]
1.47 [37.3]
5/64 [2] HEX KEY
.50[12.7]
.14[3.4]
.14 [3.4]
#8-32 THREAD
FOR POST
MOUNT
5/64 [2]
HEX KEY
Newport
LH-05DB

Newport