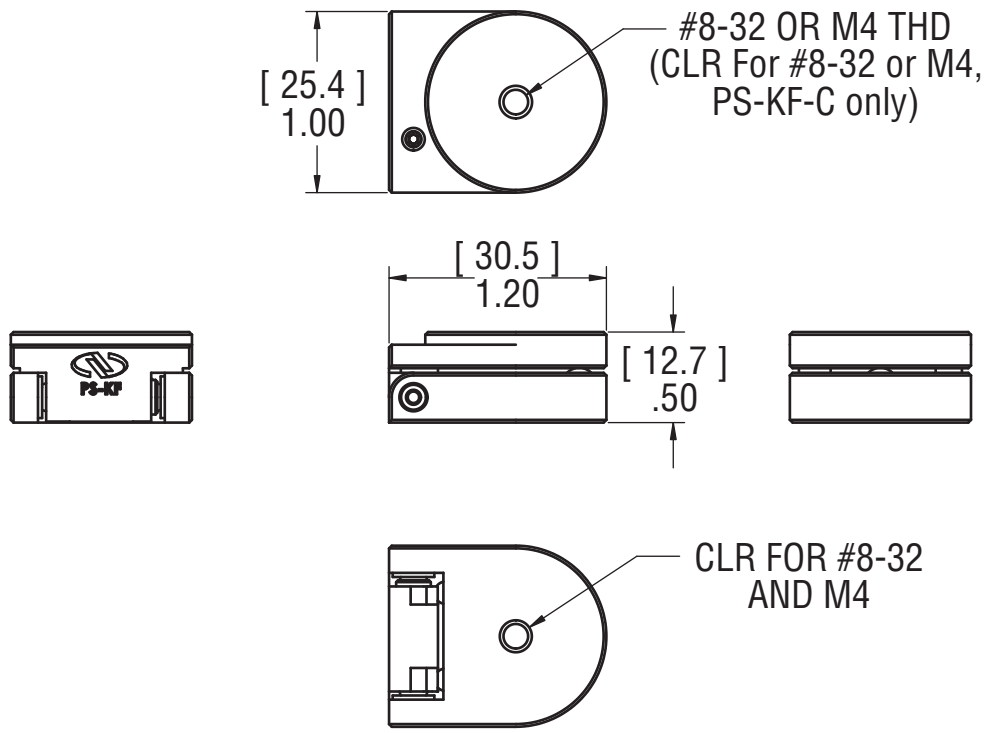
#8-32 OR M4 THD
(CLR For #8-32 or M4,
PS-KF-C only)
[25.4]
1.00
[30.5]
1.20
[12.7]
.50
PS-KF
CLR FOR #8-32
AND M4

Newport