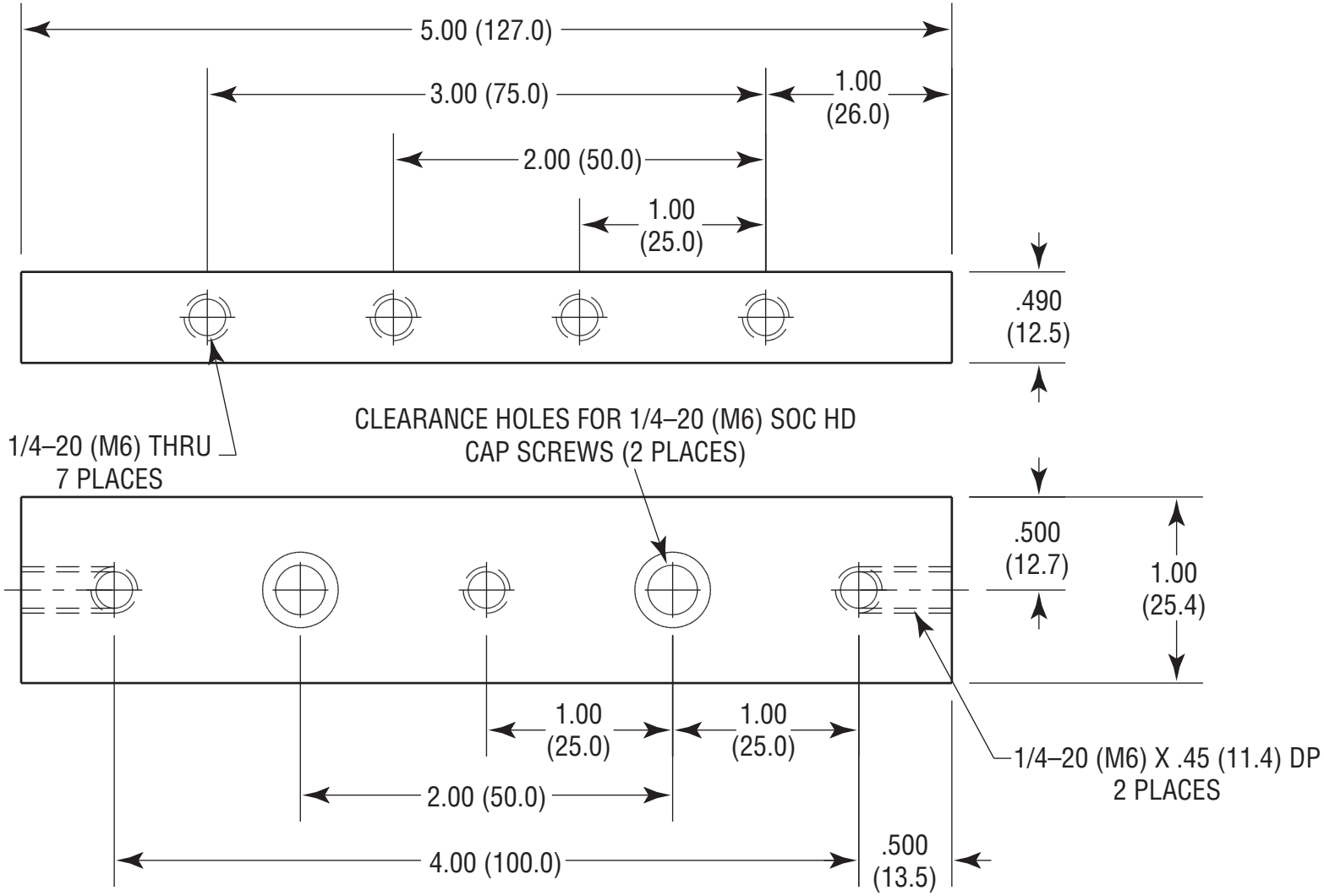
5.00 (127.0)
3.00 (75.0)
1.00
(26.0)
2.00 (50.0)
1.00
(25.0)
.490
(12.5)
1/4–20 (M6) THRU
7 PLACES
CLEARANCE HOLES FOR 1/4–20 (M6) SOC HD
CAP SCREWS (2 PLACES)
.500
(12.7)
1.00
(25.4)
1.00
(25.0)
1.00
(25.0)
1/4–20 (M6) X .45 (11.4) DP
2 PLACES
2.00 (50.0)
4.00 (100.0)
.500
(13.5)

Newport