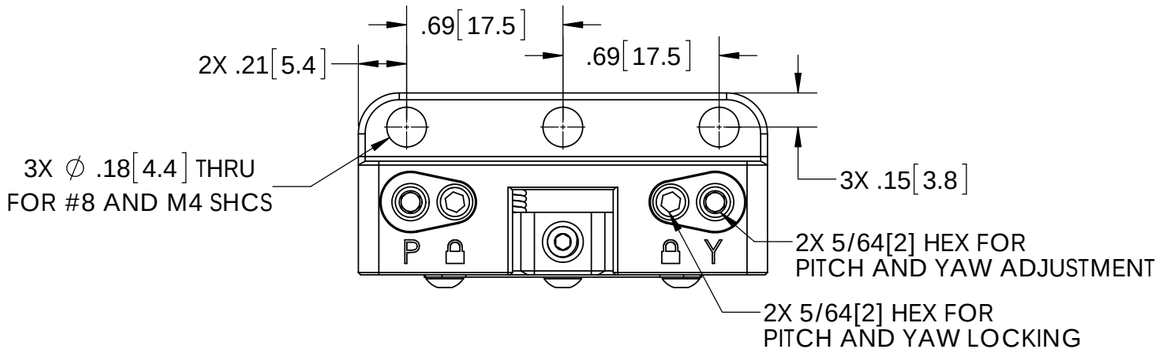

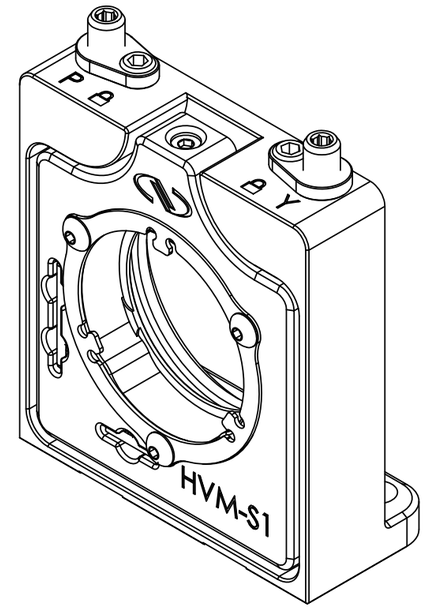

MODEL: HVM-S1w
LOW WAVEFRONT DISTORTION

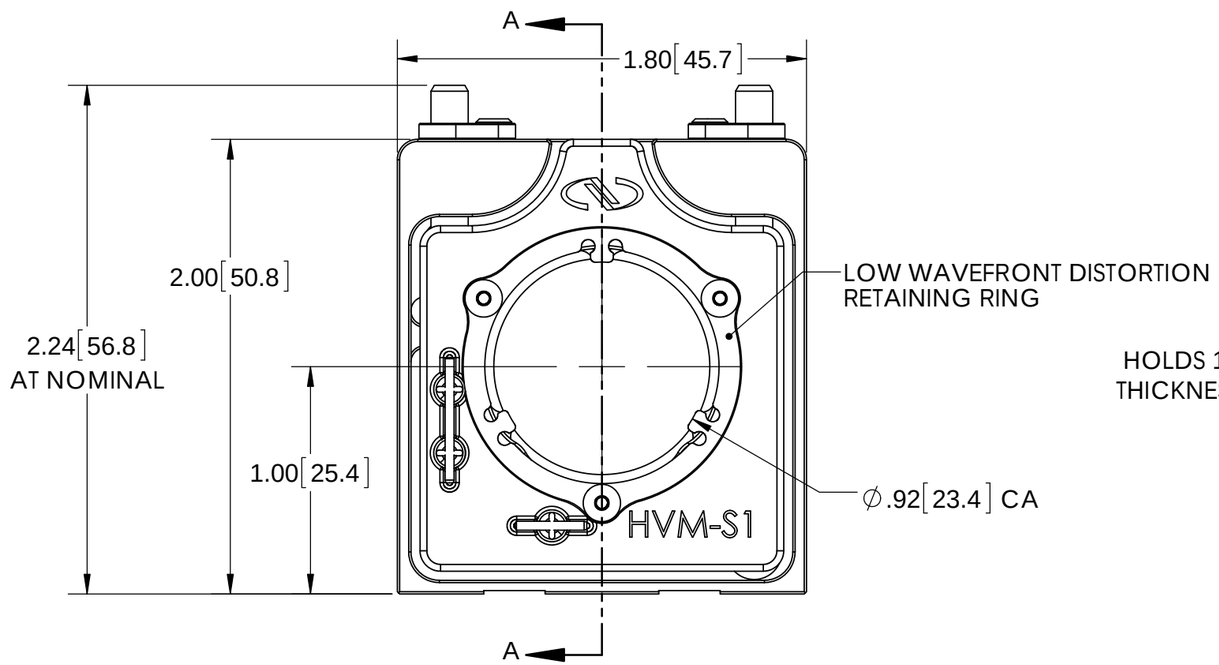

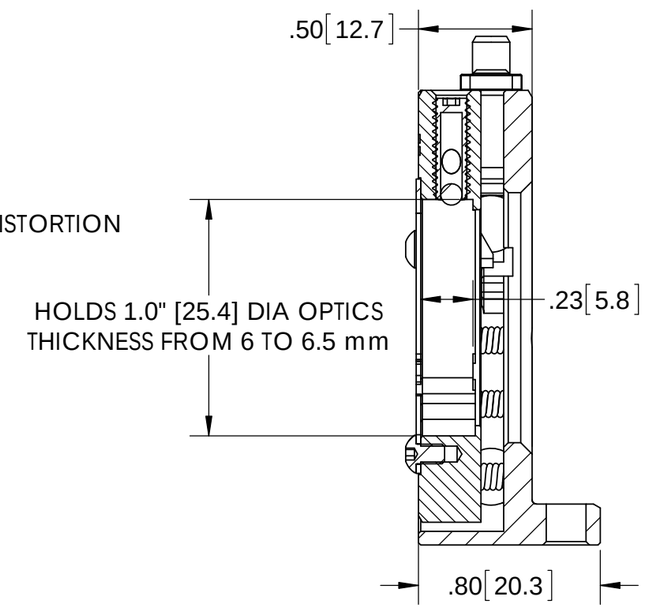

SECTION A-A

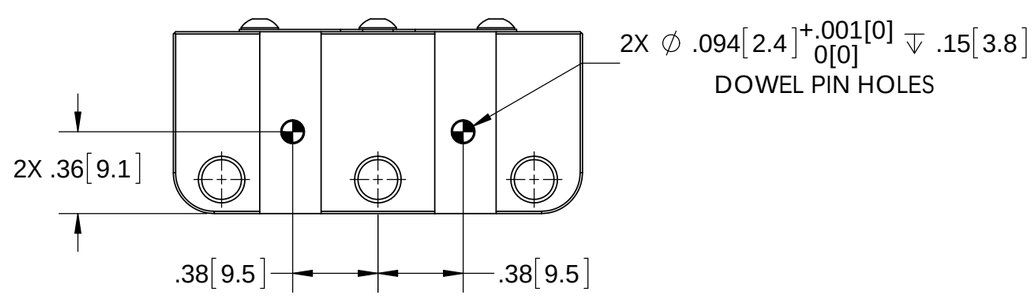

Newport®
Experience | Solutions