– TOP VIEW –

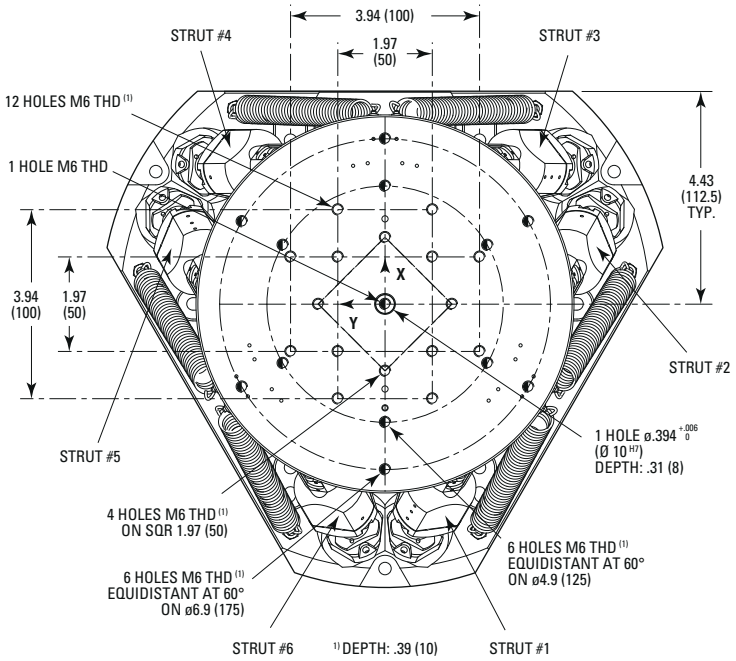

– A-A –

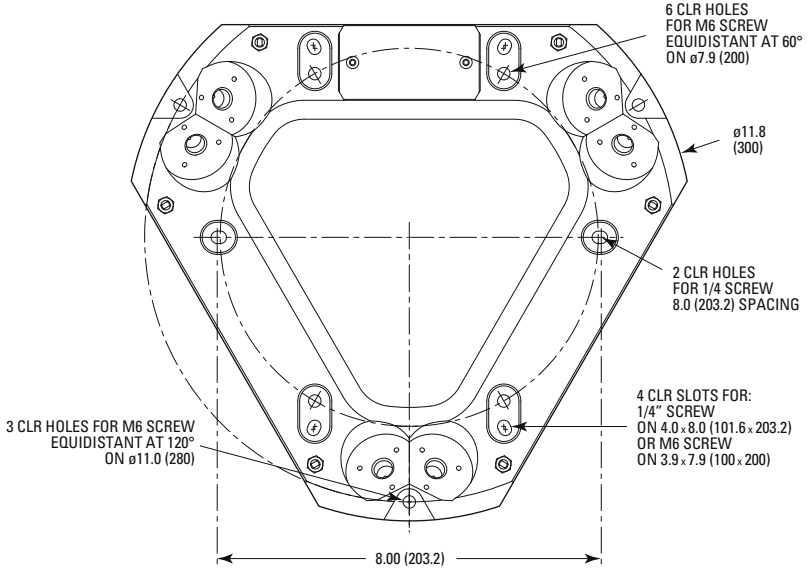

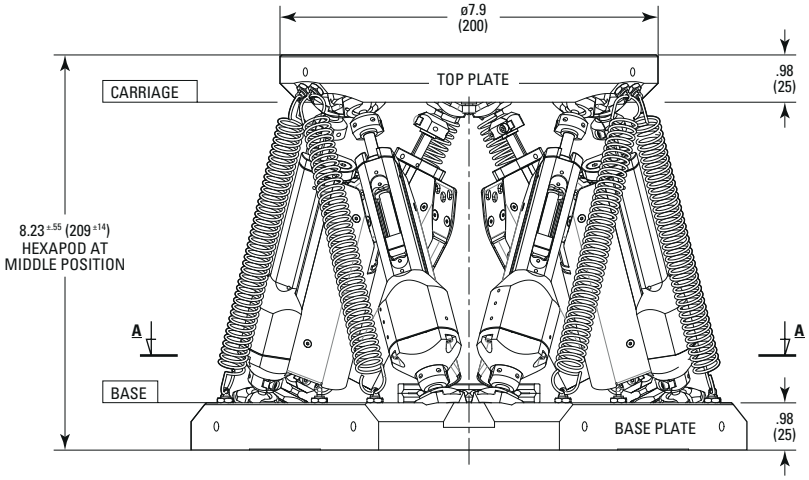

MODEL SHOWN: HXP100V6-MECA

DIMENSIONS IN INCHES (AND MILLIMETERS)

Newport