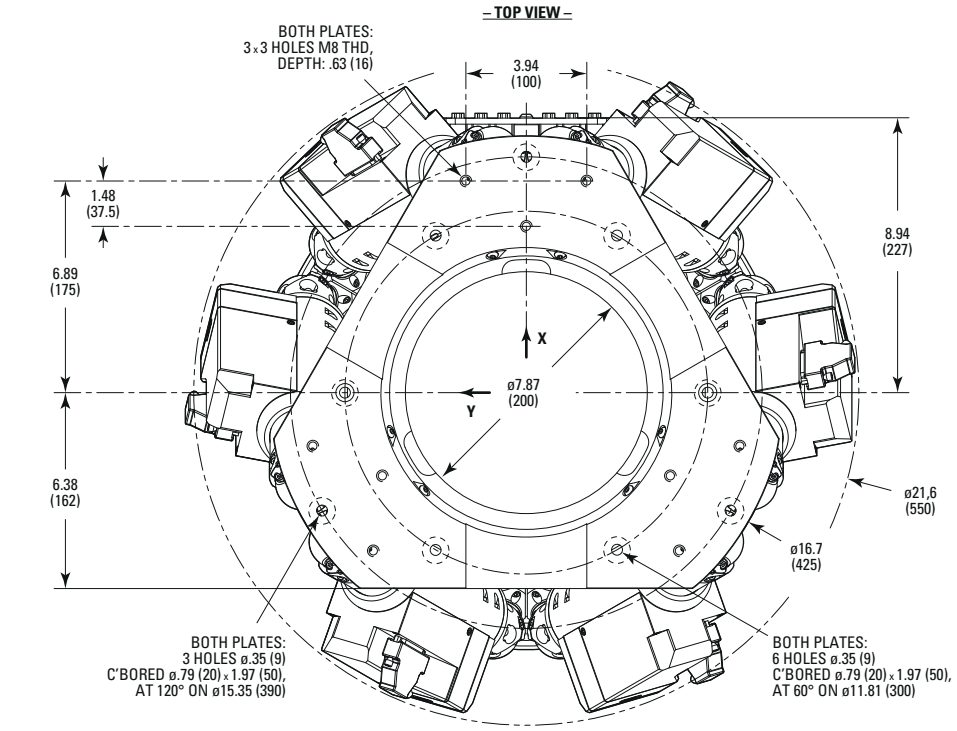

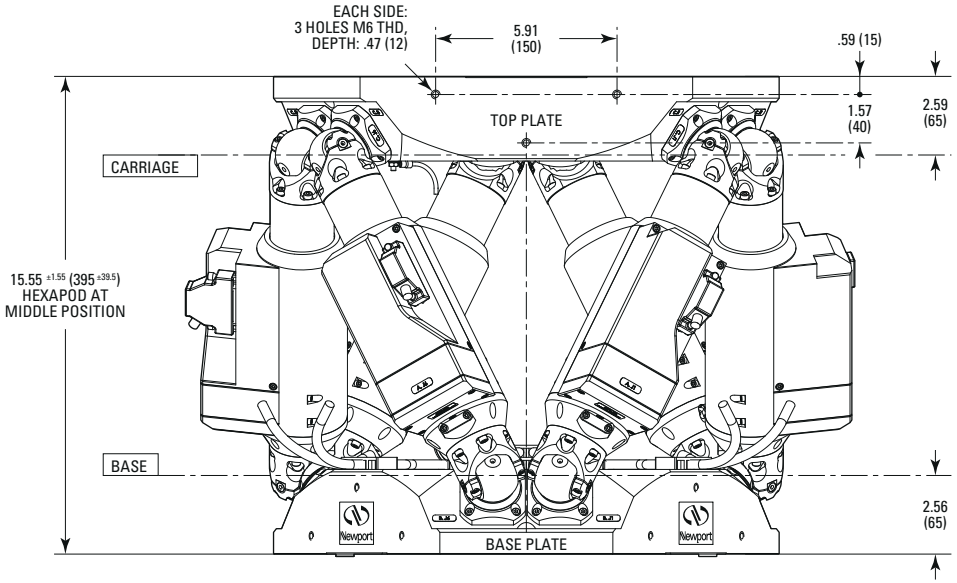

MODEL SHOWN: HXP1000-MECA

DIMENSIONS IN INCHES (AND MILLIMETERS)

0 1 2 3 4 5 IN.

0 50 100 (MM)

Newport