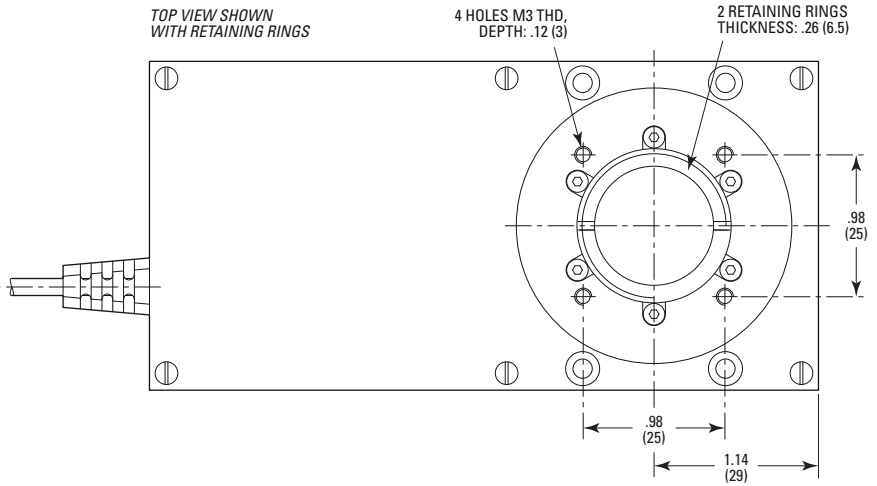

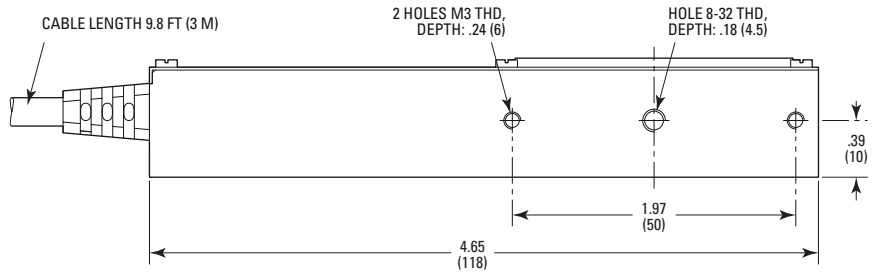

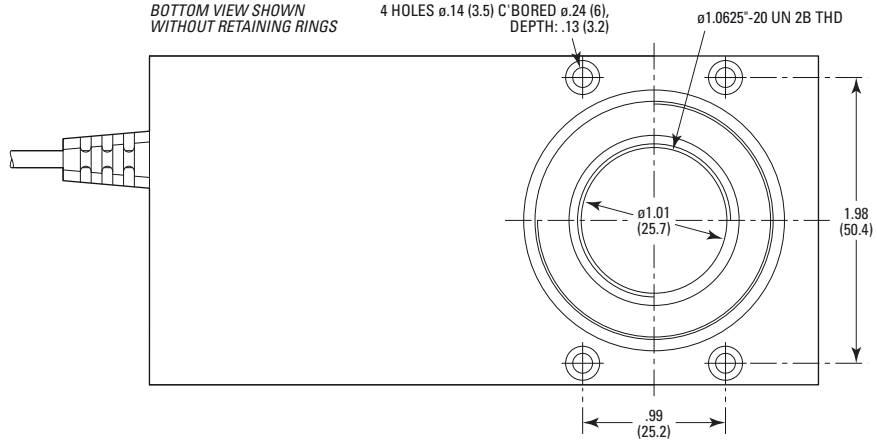

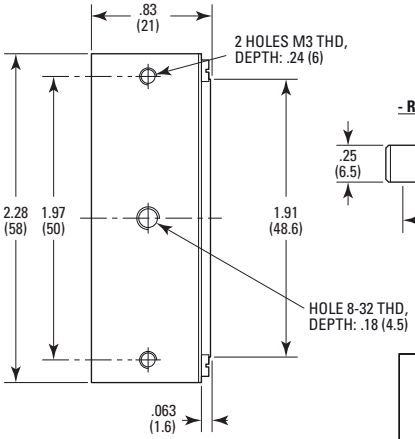

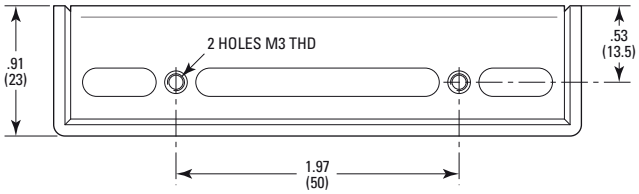

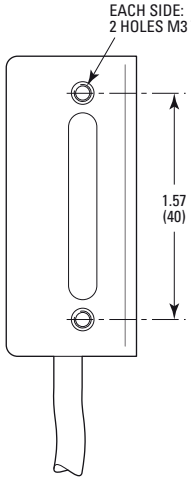

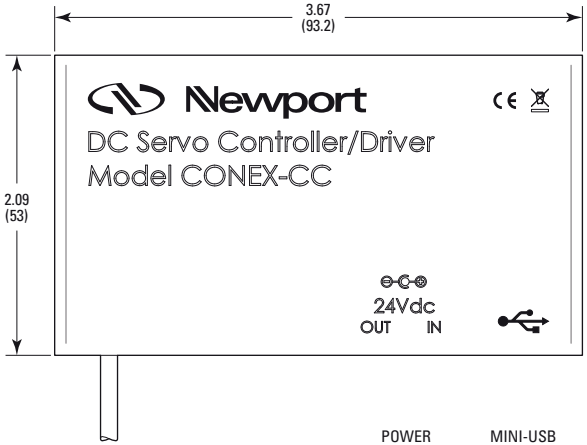

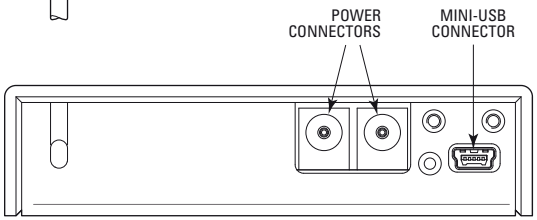

- RETAINING RING -

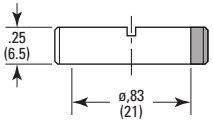

MODEL SHOWN: CONEX-PR50CC

DIMENSIONS IN INCHES (AND MILLIMETERS)

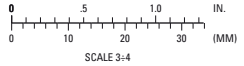

SCALE 3:4

Newport