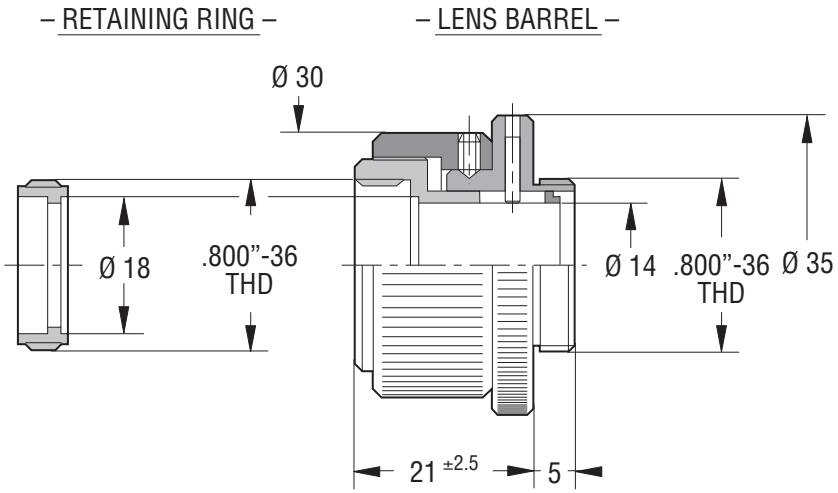
– RETAINING RING –
– LENS BARREL –
Ø 30
Ø 18
.800”-36
THD
Ø 14
.800”-36
THD
Ø 35
21 ±2.5
5

Newport