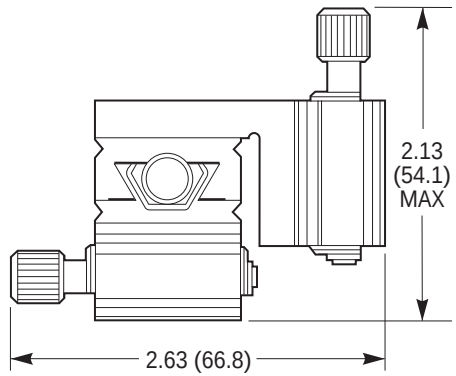
2.13
(54.1)
MAX
2.63 (66.8)

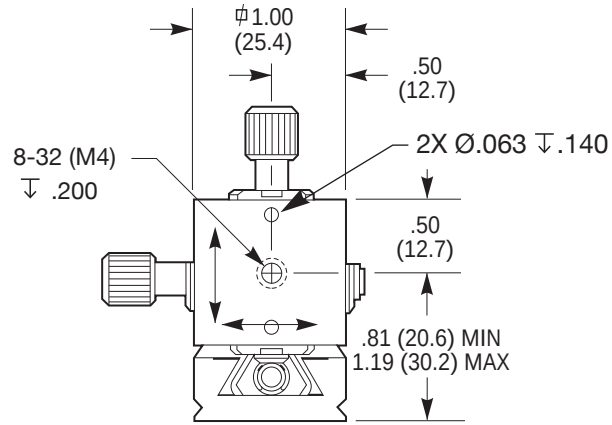
⌀1.00
(25.4)
.50
(12.7)
8-32 (M4)
↧ .200
2X Ø.063 ↧.140
.50
(12.7)
.81 (20.6) MIN
1.19 (30.2) MAX

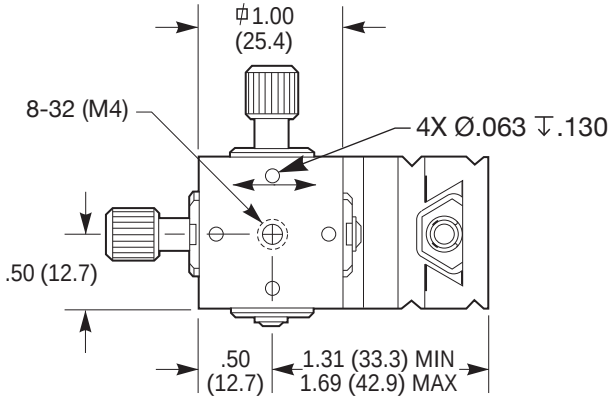
⌀1.00
(25.4)
8-32 (M4)
4X Ø.063 ↧.130
.50 (12.7)
.50
(12.7)
1.31 (33.3) MIN
1.69 (42.9) MAX

Newport