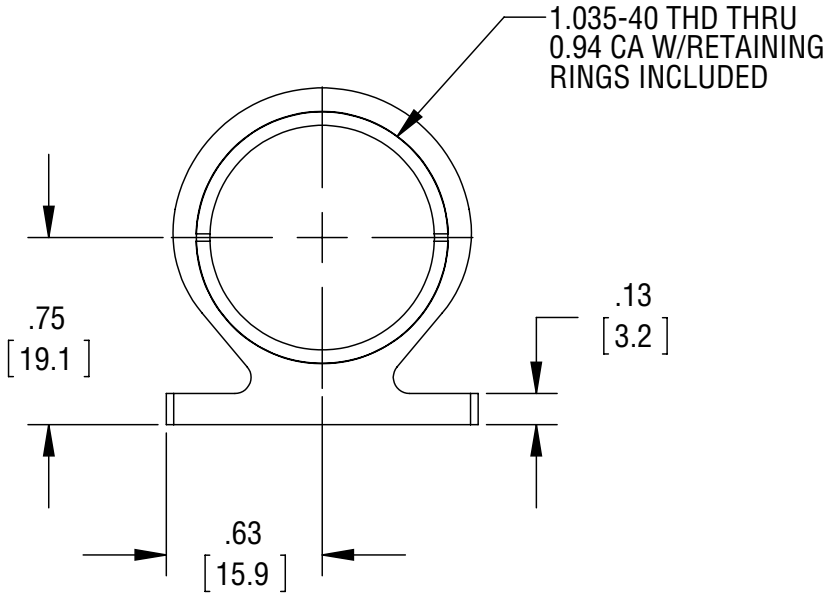
1.035-40 THD THRU
0.94 CA W/RETAINING
RINGS INCLUDED
.75
[19.1]
.13
[3.2]
.63
[15.9]

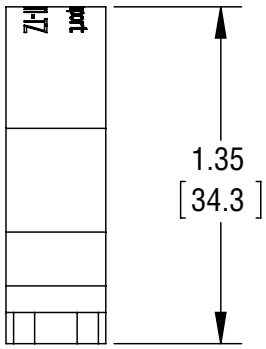
1.35
[34.3]

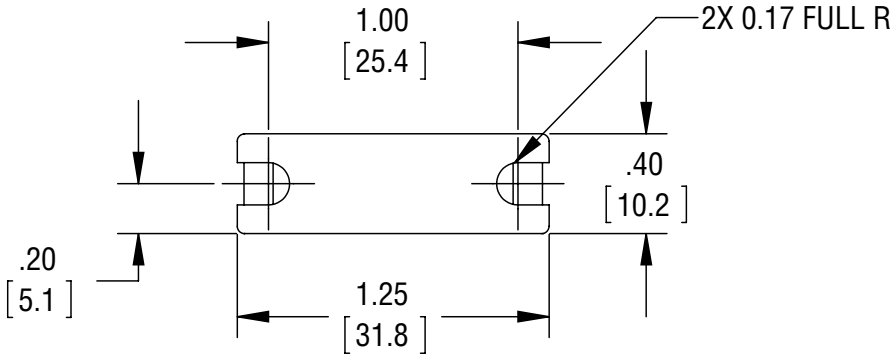
1.00
[25.4]
2X 0.17 FULL R
.40
[10.2]
.20
[5.1]
1.25
[31.8]

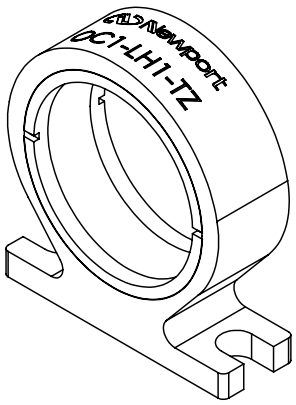
Newport
DC1-LH1-TZ

Newport