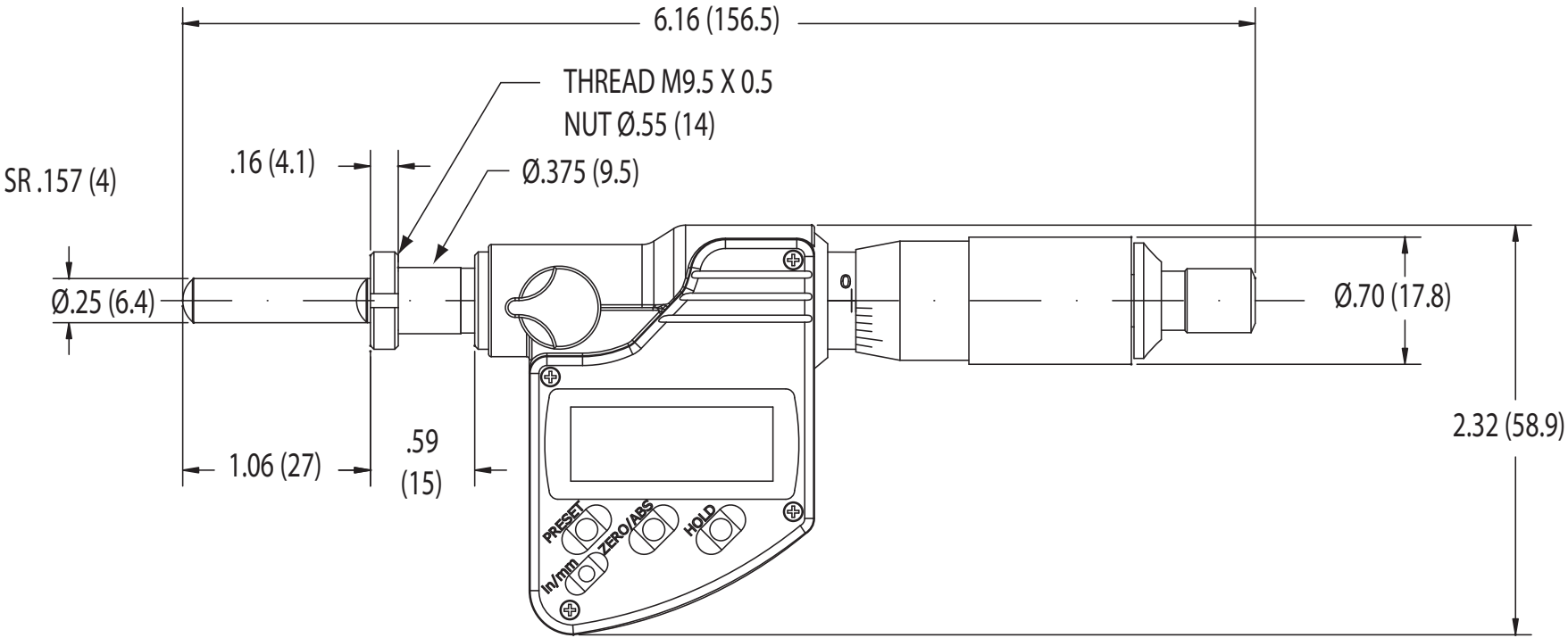
6.16 (156.5)
THREAD M9.5 X 0.5
NUT Ø.55 (14)
.16 (4.1)
Ø.375 (9.5)
SR .157 (4)
Ø.25 (6.4)
Ø.70 (17.8)
2.32 (58.9)
1.06 (27)
.59
(15)
PRESET
ZERO/ABS
HOLD
in/mm