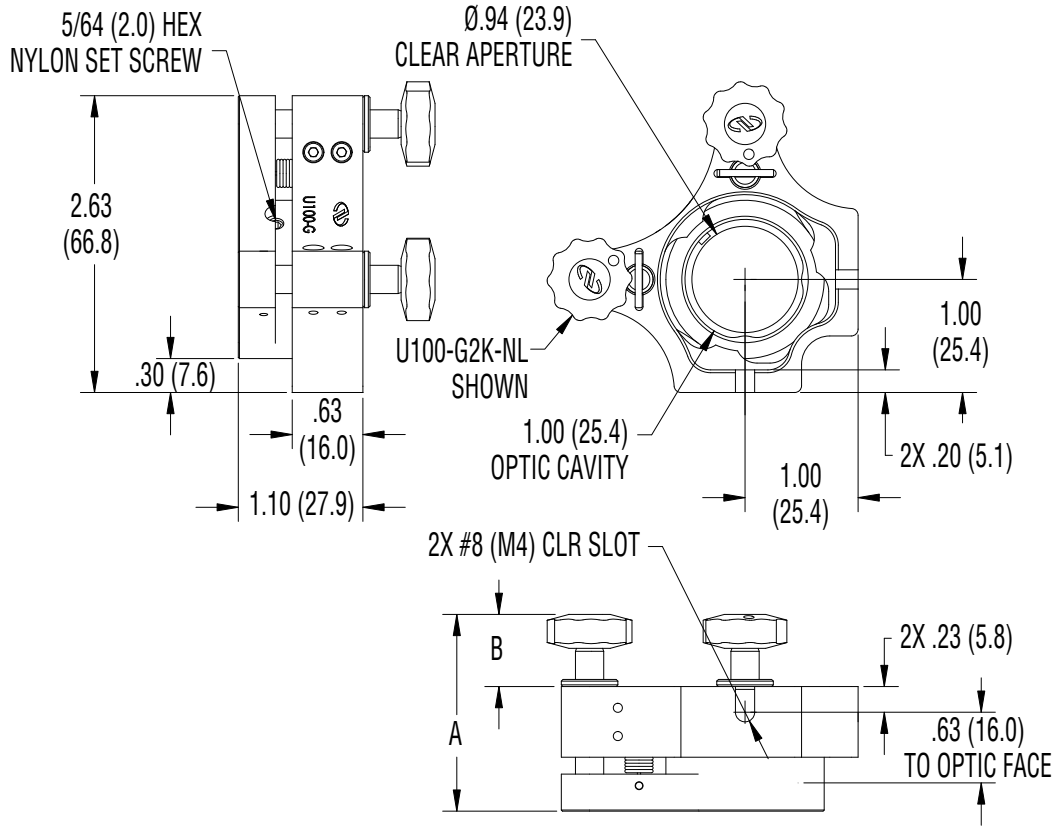
5/64 (2.0) HEX
NYLON SET SCREW
Ø.94 (23.9)
CLEAR APERTURE
2.63
(66.8)
U100-G
.30 (7.6)
.63
(16.0)
1.10 (27.9)
U100-G2K-NL
SHOWN
1.00
(25.4)
1.00 (25.4)
OPTIC CAVITY
2X .20 (5.1)
1.00
(25.4)
2X #8 (M4) CLR SLOT
B
A
2X .23 (5.8)
.63 (16.0)
TO OPTIC FACE

Newport