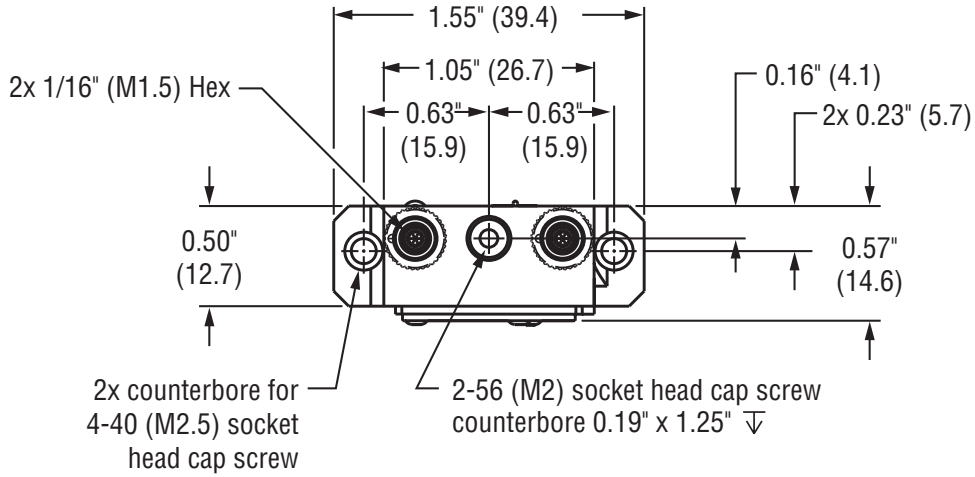

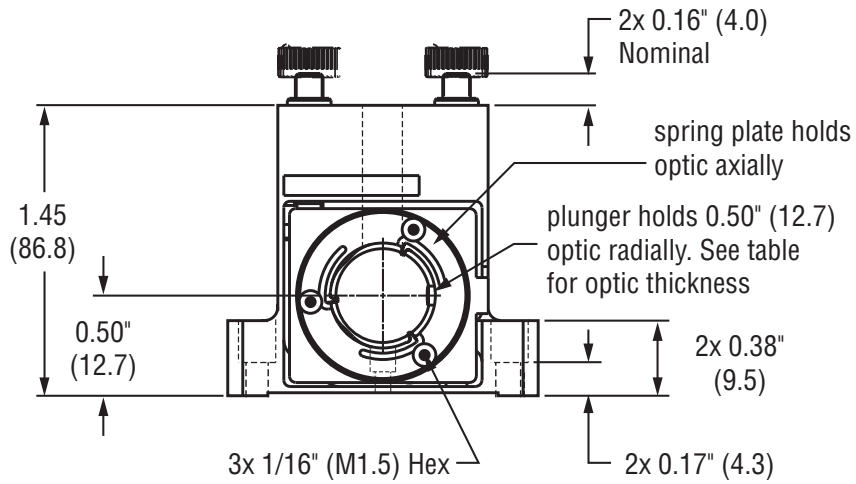

Model	Optic Thickness
9810-3	3 mm
9810-3-K	3 mm
9810-5-K	3 mm

Newport