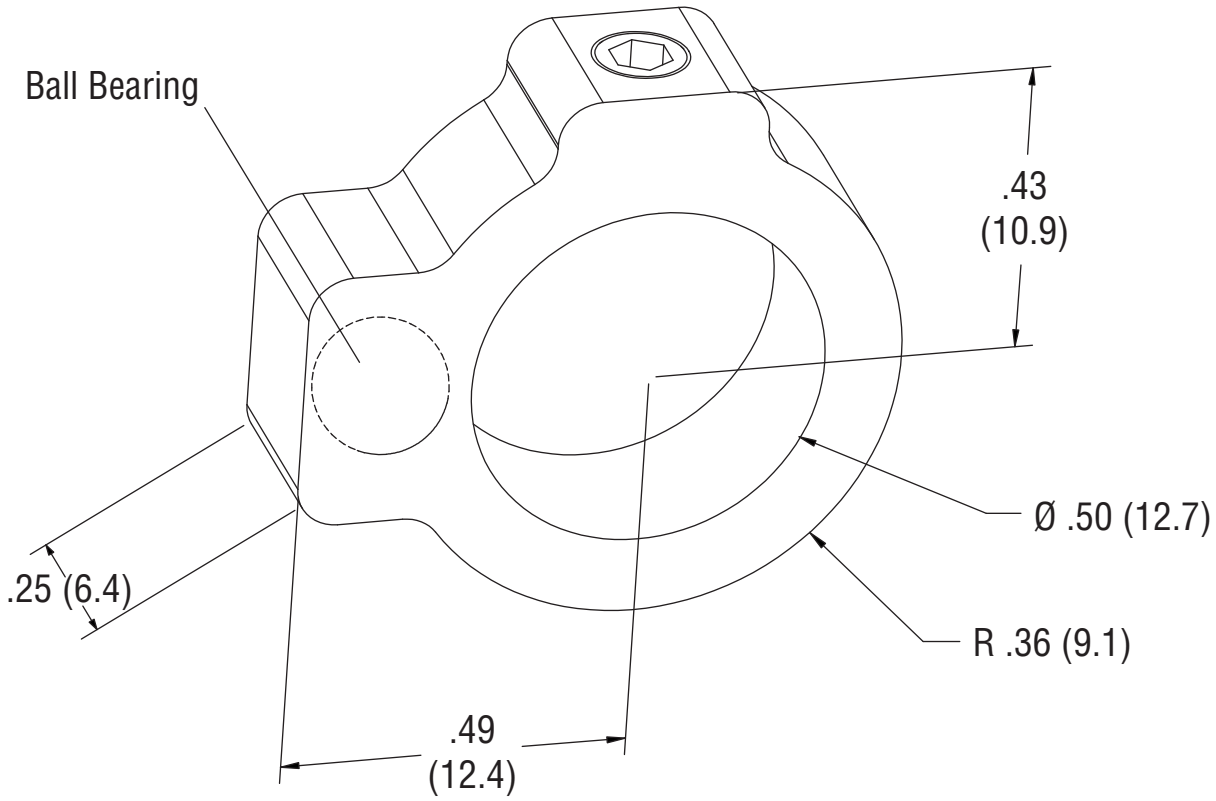

Newport