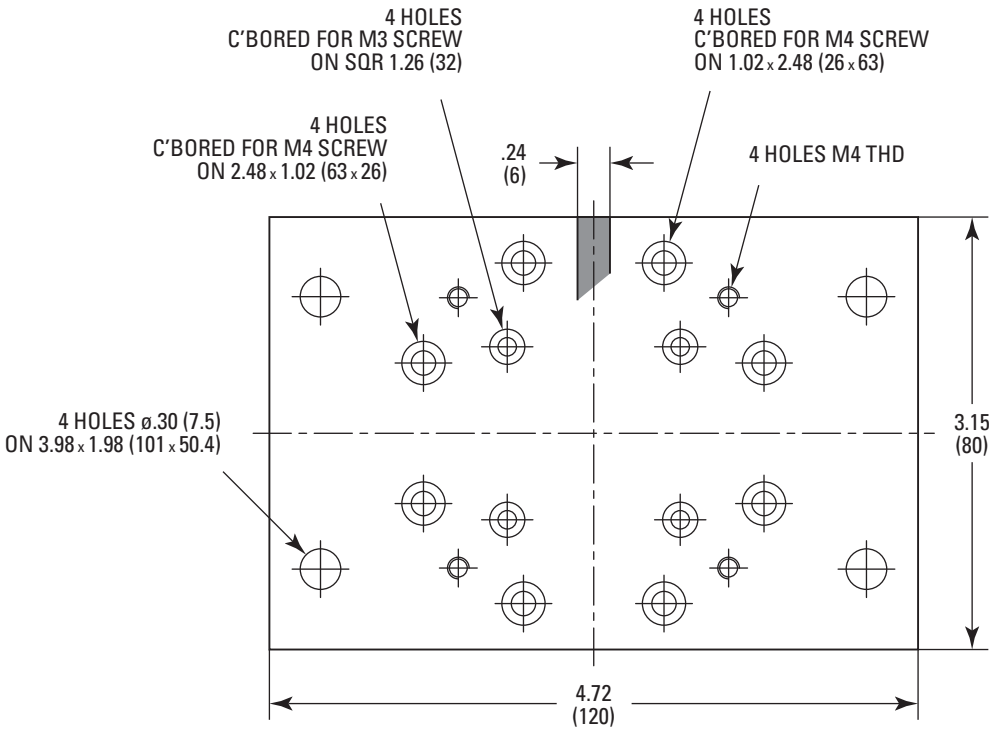
4 HOLES
C'BORED FOR M3 SCREW
ON SQR 1.26 (32)
4 HOLES
C'BORED FOR M4 SCREW
ON 1.02 x 2.48 (26 x 63)
4 HOLES
C'BORED FOR M4 SCREW
ON 2.48 x 1.02 (63 x 26)
.24
(6)
4 HOLES M4 THD
4 HOLES ø.30 (7.5)
ON 3.98 x 1.98 (101 x 50.4)
3.15
(80)
4.72
(120)

Newport