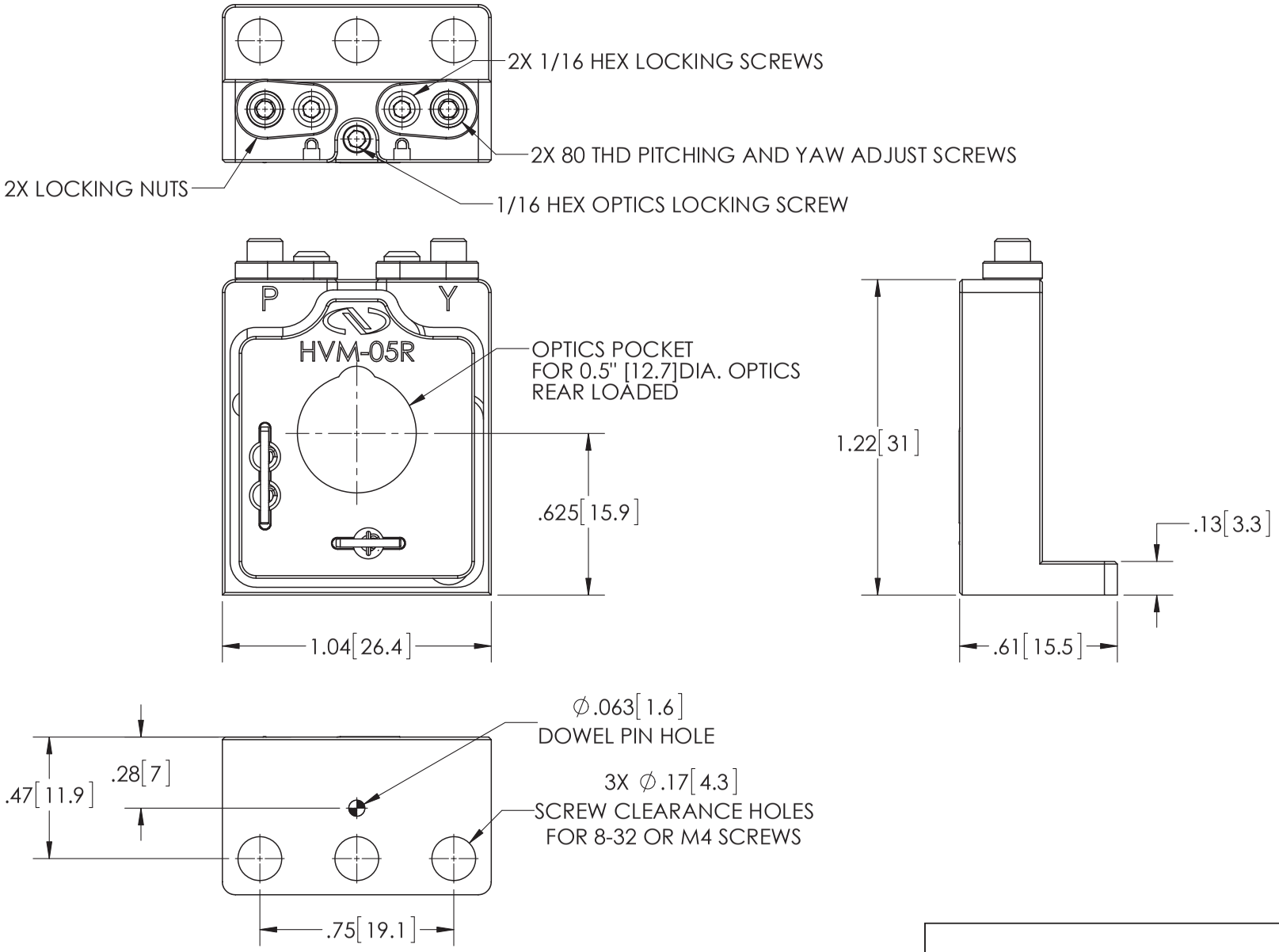
2X 1/16 HEX LOCKING SCREWS
2X 80 THD PITCHING AND YAW ADJUST SCREWS
2X LOCKING NUTS
1/16 HEX OPTICS LOCKING SCREW
P
Y
HVM-05R
OPTICS POCKET
FOR 0.5" [12.7]DIA. OPTICS
REAR LOADED
.625[15.9]
1.04[26.4]
1.22[31]
.13[3.3]
.61[15.5]
∅.063[1.6]
DOWEL PIN HOLE
.28[7]
.47[11.9]
3X ∅.17[4.3]
SCREW CLEARANCE HOLES
FOR 8-32 OR M4 SCREWS
.75[19.1]

Newport®