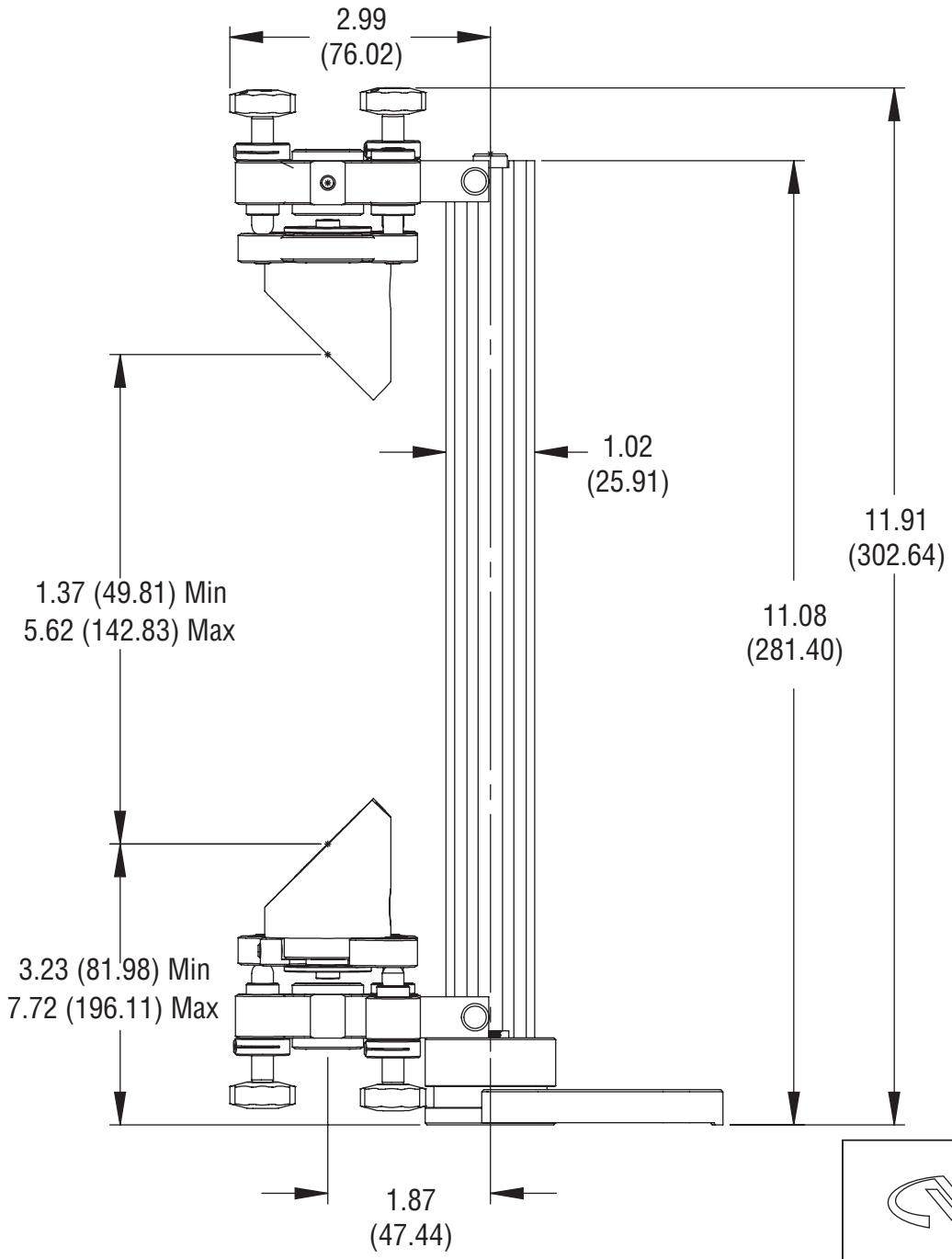
2.99
(76.02)
1.02
(25.91)
11.91
(302.64)
11.08
(281.40)
1.37 (49.81) Min
5.62 (142.83) Max
3.23 (81.98) Min
7.72 (196.11) Max
1.87
(47.44)

Newport