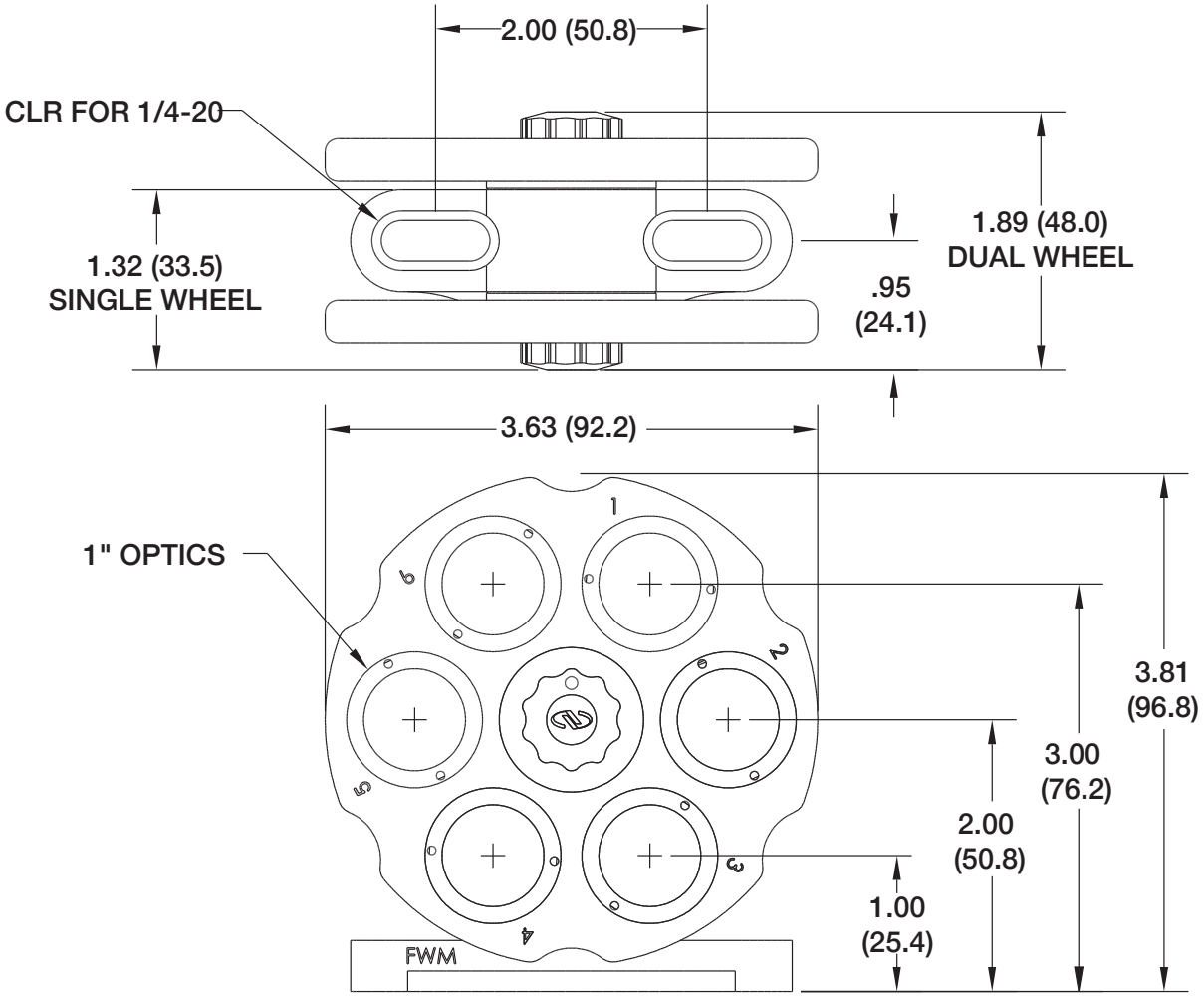
2.00 (50.8)
CLR FOR 1/4-20
1.32 (33.5)
SINGLE WHEEL
.95
(24.1)
1.89 (48.0)
DUAL WHEEL
3.63 (92.2)
1" OPTICS
1
2
3
4
5
6
FWM
3.81
(96.8)
3.00
(76.2)
2.00
(50.8)
1.00
(25.4)

Newport®